PENTAIR

FLECK 4600-MECH



INSTALLER MANUAL

WATER PURIFICATION

Table of contents

1. Generalities 7
1.1. Scope of the documentation 7
1.2. Release management 7
1.3. Manufacturer identifier, product 7
1.4. Intended use 7
1.5. Abbreviations used 8
1.6. Norms 8
1.6.1. Applicable norms 8
1.6.2. Available certificates 9
1.7. Procedure for technical support 9
1.8. Copyright 9
1.9. Limitation of liability 9
1.10. Scan & Service application 10

2. Safety 11
2.1. Safety pictograms definition 11
2.2. Serial label location 11
2.3. Hazards 12
2.3.1. Personnel 12
2.3.2. Material 12
2.4. Hygiene and sanitization 12
2.4.1. Sanitary issues 12
2.4.2. Hygiene measures 13

3. Description 14
3.1. Technical specifications 14
3.1.1. Performance flow rate characteristics 15
3.2. Outline drawing 16
3.3. Description and components location 17
3.4. System regeneration cycle 18
3.4.1. Down flow regeneration cycle (5-cycles operation) 18
3.4.2. Filter cycle (3-cycles operation) 20
3.5. Configurations for volumetric and time clock softeners 21
3.5.1. Volumetric 21
3.5.2. Time clock 22
3.6. Options available on the valve 23

4. System sizing 24
4.1. Recommendations 24
4.1.1. Injector/DLFC/BLFC-Valve configuration 24
4.2. Sizing a softener (single unit) 24
4.2.1. Parameters to be considered 24
4.2.2. Determining the required volume of resin 26
4.2.3. Resin exchange capacity and capacity of the unit 27
4.2.4. Valve configuration 29
4.2.5. Cycle time calculation 30
4.3. Salt amount definition 30
4.4. Injector flow rates 30
4.4.1. 1600 Injectors 31
4.4.2. 1650 Injectors 32

5. Installation 33
5.1. Warnings 33
5.2. Safety notices for installation 33
5.3. Installation environment 33
5.3.1. General 33
5.3.2. Water 34
5.3.3. Electrical 34
5.3.4. Mechanical 34
5.4. Integration constraints 35
5.5. Valve connection to piping 35
5.5.1. Top-mounted valve installation 36
5.6. Block diagram and configuration example 38
5.7. Regeneration types 39
5.8. Electrical connections 40
5.9. By-passing 41
5.10. Drain line connection 42
5.11. Overflow line connection 44
5.12. Brine line connection 44

6. Programming 45
6.1. Time of day 45
6.2. Volumetric 46
6.2.1. Calculating the system capacity 46
6.2.2. Set the system capacity 47
6.3. Time clock 48
6.3.1. Calculating the number of days between two regenerations 48
6.3.2. Set the number of days between two regenerations 49
6.4. Salt volume per regeneration 50
6.4.1. Salt volume definition 50
6.4.2. Set the salt volume per regeneration 51

7. Commissioning 52
7.1. Water filling, draining and waterproofness inspection 52
7.1.1. Activating the softener 52
7.2. Sanitization 53
7.2.1. Disinfection of water softeners 53
7.2.2. Sodium or calcium hypochlorite 53
7.2.3. Electro chlorination 54

8. Operation 55
8.1. Display during operation 55
8.1.1. During service 55
8.1.2. During regeneration 55
8.2. Recommendations 56
8.3. Manual regeneration 56
8.3.1. Manual immediate regeneration 56
8.3.2. To advance regeneration cycles 56
8.4. Operation during a power failure 56

9. Maintenance 57
9.1. Recommendations 57
9.1.1. Use original spare parts 57
9.1.2. Use original approved lubricants 57
9.1.3. Maintenance instructions 57
9.2. Cleaning and maintenance 57
9.2.1. First steps 57
9.2.2. Piston and/or brine valve replacement 58
9.2.3. Seals and spacers cartridge replacement 60
9.2.4. Controller motor replacement 62
9.2.5. Brine cam assembly replacement 62
9.2.6. Micro-switch replacement 63
9.2.7. Injector cleaning 64
9.2.8. BLFC cleaning 65
9.2.9. Valve on tank assembly 66

10. Troubleshooting 67

11. Spare parts 70
11.1. Power head parts list 70
11.2. Time clock power head specific parts and assembly list 72
11.3. Valve parts list 74
11.4. Meters parts list 76
11.5. Safety brine valve parts list 78
11.6. Safety brine valves list 79
11.7. Bypass and coupling parts lists 80
11.7.1. Bypass stainless Steel 1" BSP 80
11.7.2. Bypass stainless Steel 1" BSP with mixing 82
11.7.3. Plastic residential bypass and coupling parts list 84
11.8. CE compliance components list 85

12. Disposal 86

PAGE INTENTIONALLY LEFT BLANK

1. Generalities

1.1. Scope of the documentation

The documentation provides the necessary information for appropriate use of the product. It informs the user to ensure efficient execution of the installation, operation or maintenance procedures.
The content of this document is based on the information available at the time of publication. The original version of the document was written in English.
For safety and environmental protection reasons, the safety instructions given in this documentation must be strictly followed.
This manual is a reference and will not include every system installation situation. The person installing this equipment should have:

- training in the Fleck series, mechanical controllers and water softener installation;
- knowledge of water conditioning and how to determine proper controller settings;
- basic plumbing skills.

This document is available in other languages on www.pentairaquaeurope.com/product-finder/product-type/control-valves.

1.2. Release management

Revision	Date	Authors	Description
A	21.03.2018	BRY/KVA	First edition.
B	01.06.2018	BRY/FIM	Address change, Bleam information and valve on tank assembly.

1.3. Manufacturer identifier, product

Manufacturer: Pentair International LLC
Avenue de Sevelin 18
1004 Lausanne
Switzerland

Product: Fleck 4600 - MECH

1.4. Intended use

The device is intended to be used for domestic applications only and it is purpose-built for water treatment.

1.5. Abbreviations used

Assy ..... Assembly
BLFC ..... Brine Line Flow Controller
BV ..... Brine Valve
CW ..... Cold Water
DF ..... Down Flow
Distr ..... Distribution
DLFC ..... Drain Line Flow Controller
FR ..... Fast Regeneration
HW ..... Hot Water
Imm ..... Immediate
Inj ..... Injector
N/A ..... Not Available
PN ..... Part Number
Regen ..... Regeneration
S&S ..... Seals & Spacers
SBV ..... Safety Brine Valve
STD ..... Standard
Sys ..... System
VB ..... Valve Body

1.6. Norms

1.6.1. Applicable norms

Comply with the following guidelines:

- 2006/42/EC: Machinery Directive;
- 2014/35/UE: Low Voltage Directive;
- 2014/30/UE: Electromagnetic Compatibility;
- 2011/65/CE: Restriction of use of certain Hazardous Substances in electrical and electronic equipment (RoHS);
- UNI EN ISO9001 (certificate no. 95.022 SSG ICS).

Meets the following technical standards:

- EN 55014-1;
- EN 55014-2;
- EN 61000-6-1;
- EN 61000-6-2;
- EN 61000-6-3;
- EN 61000-6-4;
- EN 61010-1.

1.6.2. Available certificates

- CE;
- DM174;
- ACS.

Access to all certifications:

1.7. Procedure for technical support

Procedure to follow for any technical support request:

A Collect the required information for a technical assistance request.
→ Product identification (see 2.2. Serial label location, page 11 and 9.1. Recommendations, page 57);
→ Problem description of the device.

B Please refer to the chapter, "Troubleshooting", page 67. If the problem persists contact your supplier.

1.8. Copyright

© 2018 Pentair International Sàrl All rights reserved.

1.9. Limitation of liability

Pentair Quality System EMEA products benefit, under specific conditions, from a manufacturer warranty that may be invoked by Pentair's direct customers. Users should contact the vendor of this product for applicable conditions and in case of a potential warranty claim.

Any warranty provided by Pentair regarding the product will become invalid in case of:

- improper installation, improper programming, improper use, improper operation and/or maintenance leading to any kind of product damages;
- improper or unauthorized intervention on the controller or components;
- incorrect, improper or wrong connection/assembly of systems or products with this product and vice versa;
- use of a non-compatible lubricant, grease or chemicals of any type and not listed by the manufacturer as compatible for the product;
- failure due to wrong configuration and/or sizing.

Pentair accepts no liability for equipment installed by the user upstream or downstream of Pentair products, as well as for process/production processes which are installed and connected around or even related to the installation. Disturbances, failures, direct or indirect damages that are caused by such equipment or processes are also excluded from the warranty. Pentair shall not accept any liability for any loss or damage of profits, revenues, use, production, or contracts, or for any indirect, special or consequential loss or damage whatsoever. Please refer to the Pentair List Price to know more about terms and conditions applicable to this product.

1.10. Scan & Service application

Scan & Service mobile application is the ideal support for the maintenance person in his daily business. A simple scan of an identification (ID) label (1) present on the valve with a smartphone gives an instantaneously access to all updated information related to the product, such as:

- valve's and tanks detailed configuration;
- manuals;
- spare parts lists;
- troubleshooting recommendations;
- multi-lingual videos, detailing how to best service a part;
- informations about new products, latest technologies, novelties about the Blue Network program, etc....

No.	Operation
A	Download the application "Scan & Service" from Available on the App Store or Available on the Google play in a smartphone (4).
B	Open the application "Scan & Service".
C	Scan the bleam (3) stuck on the valve (2).
D	Navigate to find information.

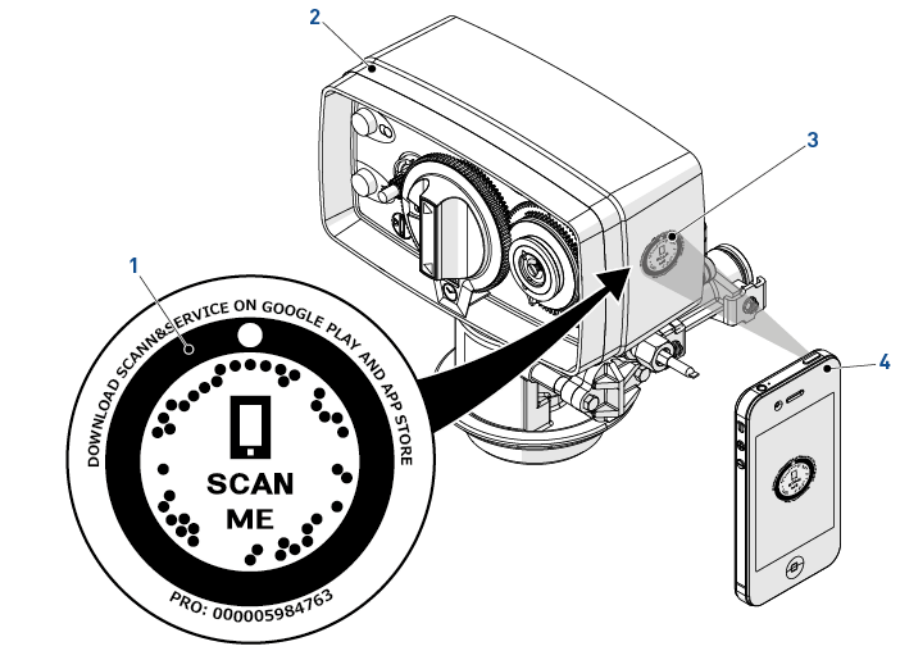

2. Safety

2.1. Safety pictograms definition

Caution
Warns of a risk of minor injury or major material damage to the device or environment.

Warning
Warns against serious personal injury and damage to health.

Danger
Warns against serious personal injury or death.

Mandatory
Standard or measure to apply.

Note
Comment.

Prohibition
Restriction to be observed.

2.2. Serial label location

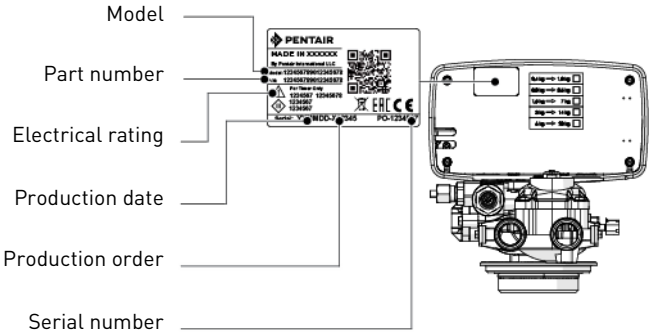

Note
Ensure that the serial label and the safety tags on the device are completely legible and clean. If necessary, replace them with new tags and put them in the same places.

2.3. Hazards

All the safety and protection instructions contained in this document must be observed in order to avoid temporary or permanent injury, damage to property or environmental pollution.

At the same time, any other legal regulations, accident prevention and environmental protection measures, as well as any recognized technical regulations relating to appropriate and risk-free methods of working which apply in the country and place of use of the device must be adhered to.

Any non-observation of the safety and protection rules, as well as any existing legal and technical regulations, will result in a risk of temporary or permanent injury, damage to property or environmental pollution.

2.3.1. Personnel

Only qualified and professional personnel, based on their training, experience and instruction as well as their knowledge of the regulations, the safety rules and operations performed, are authorized to carry out necessary work.

2.3.2. Material

The following points must be observed to ensure proper operation of the system and the safety of user:

- be careful of high voltages present on the transformer (100 - 240 V);
- do not put your fingers in the system (risk of injuries with moving parts and shock due to electric voltage).

2.4. Hygiene and sanitization

2.4.1. Sanitary issues

Preliminary checks and storage

- Check the integrity of the packaging. Check that there is no damage and no signs of contact with liquid to make sure that no external contamination occurred;
- the packaging has a protective function and must be removed just before installation. For transportation and storage appropriate measures should be adopted to prevent the contamination of materials or objects themselves.

Assembly

- Assemble only with components which are in accordance with drinking water standards;
- after installation and before use, perform one or more manual regenerations in order to clean the media bed. During such operations, do not use the water for human consumption. Perform a disinfection of the system in the case of installations for treatment of drinking water for human use.



Note
This operation must be repeated in the case of ordinary and extraordinary maintenance. It should also be repeated whenever the system remains idle for a significant time.

2.4.2. Hygiene measures

Disinfection

- The materials used for the construction of our products meet the standards for use with potable water; the manufacturing processes are also geared to preserving these criteria. However, the process of production, distribution, assembly and installation, may create conditions of bacterial proliferation, which may lead to odor problems and water contamination;
- it is therefore strongly recommended to sanitize the products. See 7.2. Sanitization, page 53;
- maximum cleanliness is recommended during the assembly and installation;
- for disinfection, use Sodium or Calcium Hypochlorite and perform a manual regeneration.

3. Description

3.1. Technical specifications

Design specifications/ratings

Valve body ..... Brass
Rubber components ..... EP or EPDM
Weight (valve with controller) ..... 2.5 kg
Recommended operating pressure ..... 1.4 - 8.6 bar
Maximum inlet pressure ..... 8.6 bar
Hydrostatic test pressure..... 20 bar
Water temperature std..... 1 - 43°C
Water temperature for HW volumetric .. 1 - 65°C
Water temperature for HW time clock... 1 - 82°C
Ambient temperature..... 5 - 40°C

Flow rates (3.5 bar inlet - valve only)

Continuous (Δp = 1 bar) ..... 4.5 m^3/h
Peak (Δp = 1.8 bar)..... 5.9 m^3/h
Cv*..... 5.2 gpm
Kv*..... 4.5 m^3/h
Maximum backwash (Δp = 1.8 bar) ..... 1.6 m^3/h

*Cv : Flow rate in gpm across the valve at a pressure drop of 1 psi at 60°F.
*Kv : Flow rate in m^3/h across the valve at a pressure drop of 1 bar at 16°C.

Valve connections

Tank thread..... 2½" - 8NPSM
Inlet/Outlet..... ¾" or 1"
Riser tube ..... 26.7 mm O.D., 1.05" tube
Drain line ..... ½" O.D.
Brine line (1650)..... ⅜"

Electrical

Power supply ..... 230 VAC, 50/60 Hz, 15 VA
Transformer output voltage ..... 24 VAC, 10 VA max.
Motor input voltage..... 24 VAC
Controller input voltage ..... 24 VAC
Controller max. power consumption .... 5 W
Protection rating..... IP 22
Transient overvoltages..... within the limits of category II
Pollution degree 3

Temporary overvoltages must be limited in duration and in frequency.

Environmental conditions

- Indoor use only;
- temperature from 5°C to 40°C;
- maximum relative humidity 80% for temperatures up to 31°C decreasing linearly to 50% relative humidity at 40°C;
- mains supply voltage fluctuations up to ±10% of the nominal voltage.

3.1.1. Performance flow rate characteristics

The graph shows the pressure drop created by the valve itself at different flow rates. It allows to predetermine the maximum flow rate going through the valve depending on the system settings (inlet pressure etc). It also allows to determine the valve pressure drop at a given flow rate, and therefore to evaluate the system pressure drop vs flow rate.

FLOW RATE VS PRESSURE DROP

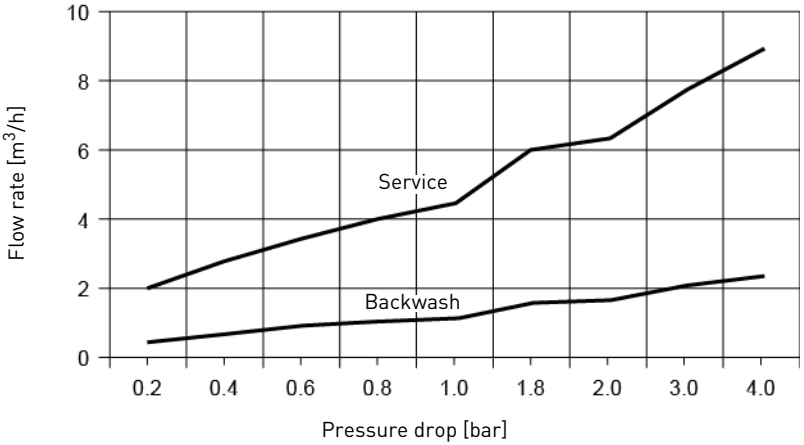

3.2. Outline drawing

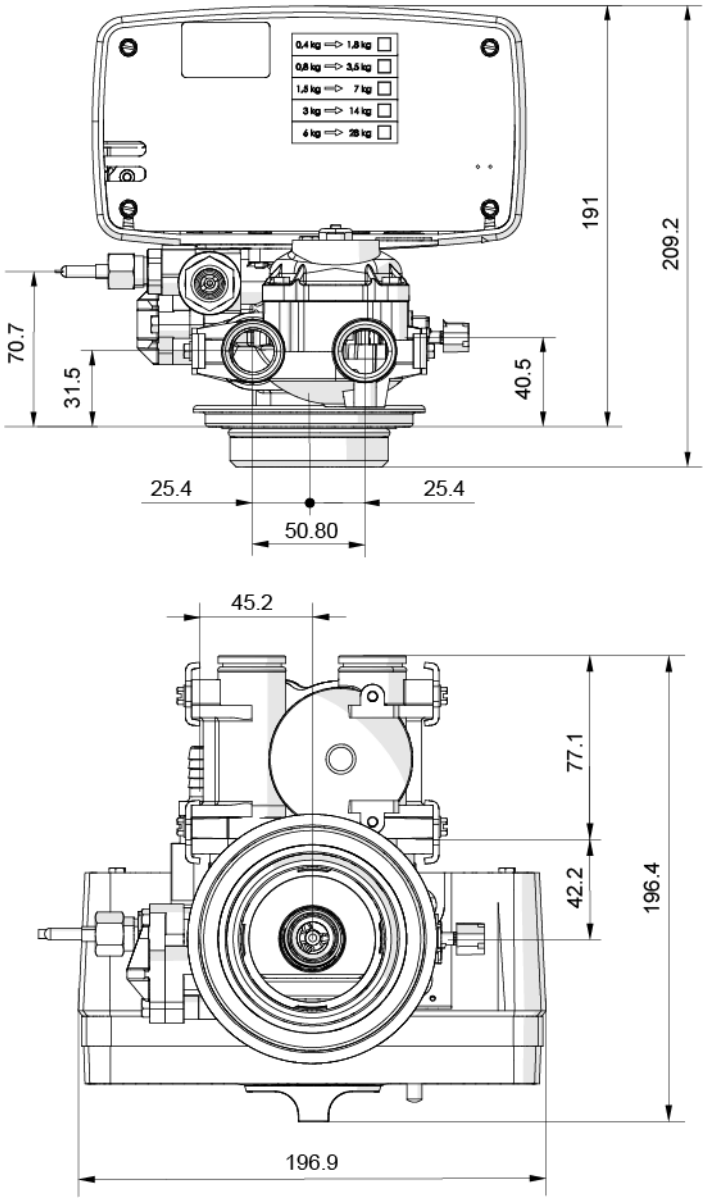

3.3. Description and components location

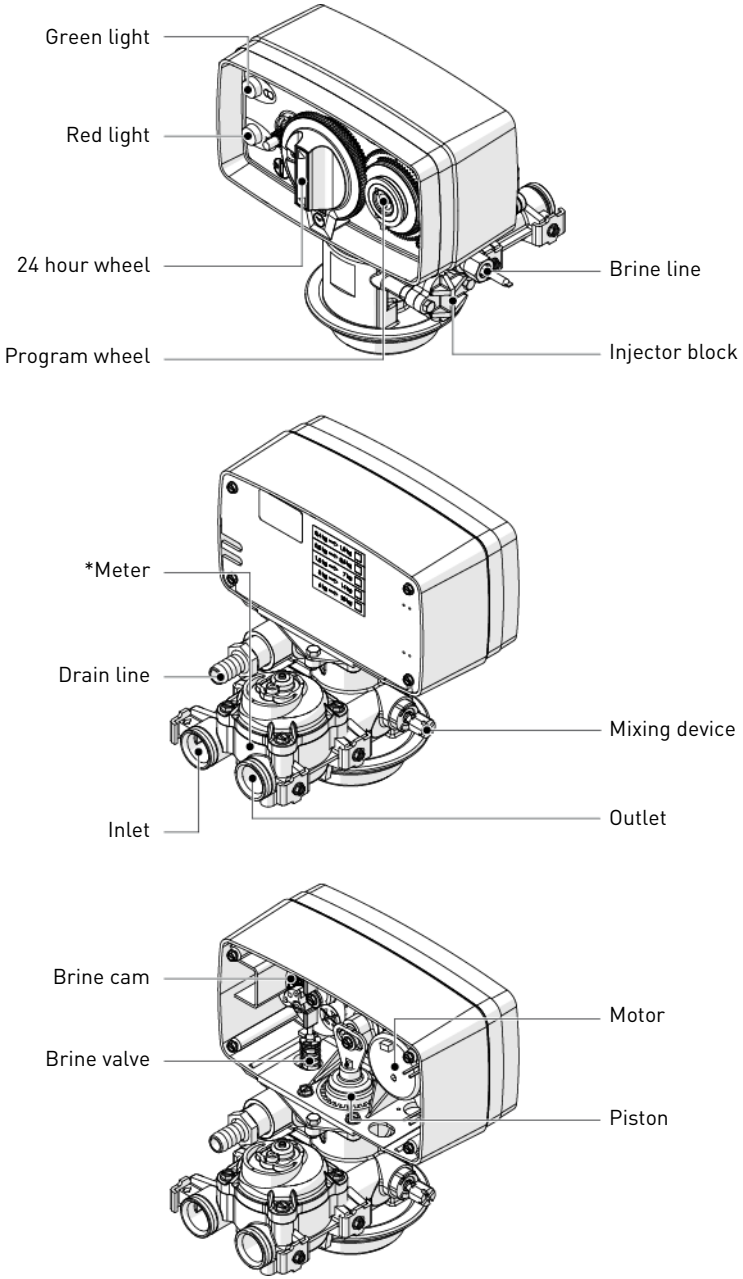

*Not included in case of time clock

3.4. System regeneration cycle

Note
This valve allows to do down flow regenerations.

3.4.1. Down flow regeneration cycle (5-cycles operation)

Service — normal use
Untreated water is directed down through the resin bed and up through the riser tube. The hardness ions attach themselves to the resin and are removed from the raw water being exchanged on the resin beads against sodium ions. The water is conditioned as it passes through the resin bed.

Backwash — cycle C1
The flow of water is reversed by the valve and directed down the riser tube and up through the resin bed. During the backwash cycle, the bed is expanded and debris is flushed to the drain, while the media bed is remixed.

Brine draw & slow rinse — cycle C2
The controller directs water through the brine injector and brine is drawn from the brine tank. The brine is then directed down through the resin bed and up through the riser tube to the drain. The hardness ions on the resin beads are replaced by sodium ions and are sent to the drain. The resin is regenerated during the brine cycle. Afterwards the slow rinse phase starts.

Second backwash — cycle C3 (Double backwash units only)
The flow of water is reversed by the valve and directed down the riser tube and up through the resin bed. During the backwash cycle, the bed is expanded and debris is flushed to the drain, while the media bed is remixed.

Rapid rinse — cycle C4
The valve directs water down through the resin bed and up through the riser tube to the drain. Any residual brine is rinsed from the resin bed, while the media bed is recompacted.

Brine tank refill — cycle C5
Water is directed to the brine tank, at a rate controlled by the refill controller [BLFC], to create brine for the next regeneration. During brine refill, treated water is already available at the valve outlet.

Note
For illustration purpose only. Always verify inlet and outlet marking on the valve.

SERVICE
NORMAL USE

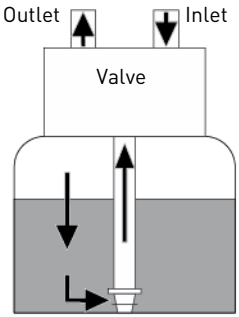

C1
BACKWASH

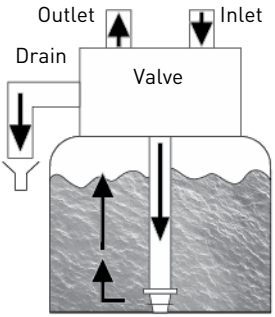

C2
BRINE DRAW & SLOW RINSE

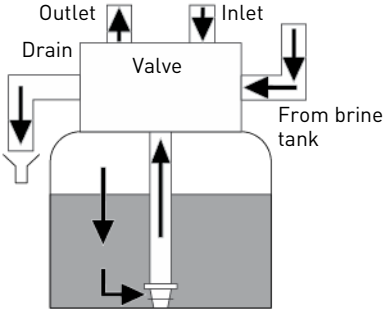

C3
SECOND BACKWASH
(Double backwash units only)

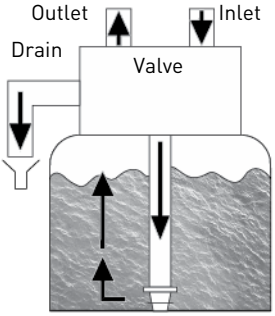

C4
RAPID RINSE

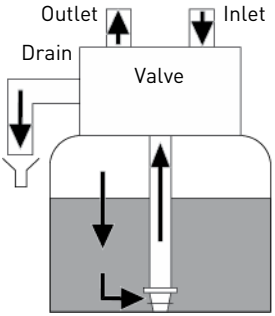

C5
BRINE REFILL

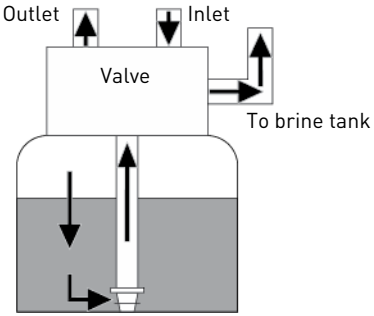

3.4.2. Filter cycle (3-cycles operation)

Service — normal use

Untreated water is directed down through the media and up through the riser tube. The impurities are retained by the media. The water is filtered as it passes through the media.

Backwash — cycle C1

The flow of water is reversed by the valve and directed down through the riser tube and up through the media. During the backwash cycle, the media is expanded and debris is flushed to the drain.

Rapid rinse — cycle C2

The valve directs water down through the media and up through the riser tube to the drain. The media is recompacted.

Note
For illustration purpose only. Always verify inlet and outlet marking on the valve.

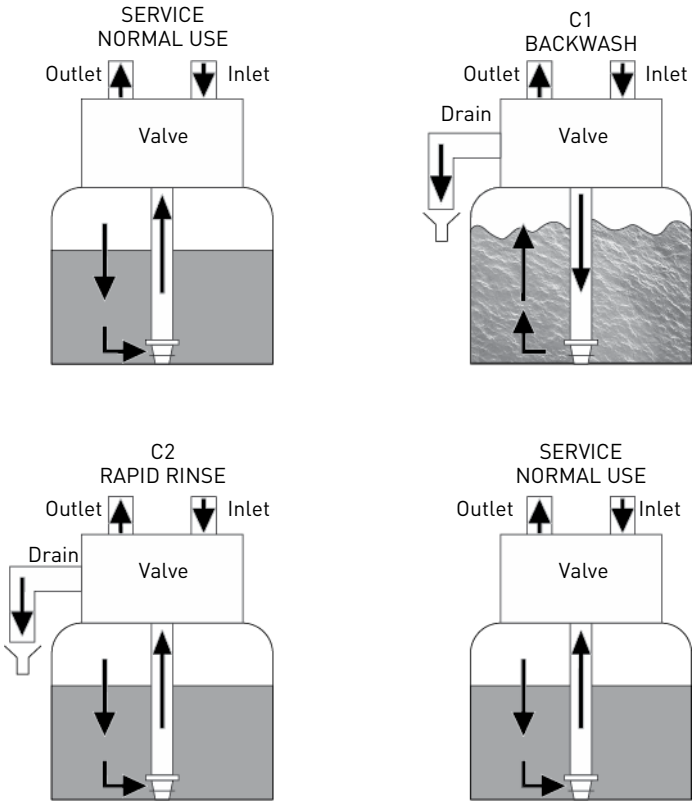

3.5. Configurations for volumetric and time clock softeners

To configure the valve as volumetric or time clock softener, the 24 hour gear, the skipper or program wheel and the meter must be set as shown below.

3.5.1. Volumetric

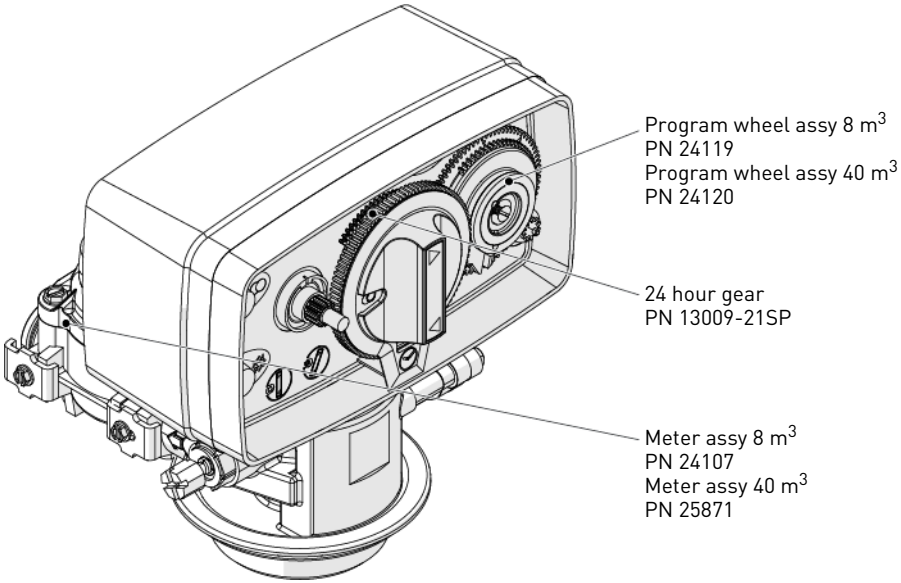

3.5.2. Time clock

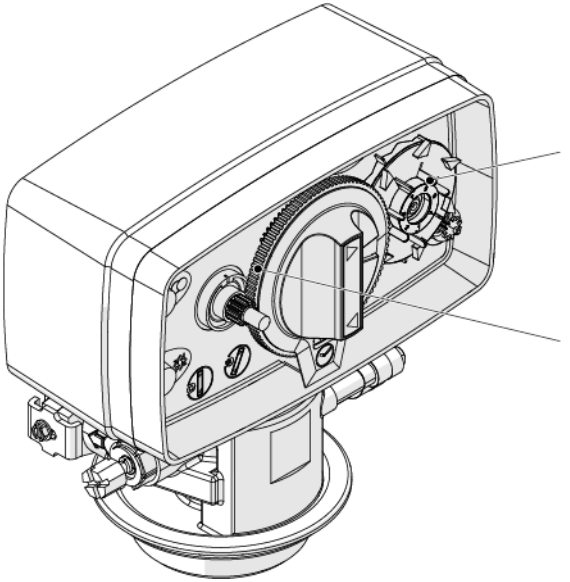

3.6. Options available on the valve

Mixing device

The valve can be equipped with a mixing device (1) whose function is to regulate the hardness of the water at the outlet. The mixing can be set from 0% to 50% of hard water (i.e. 0 turn = 0% of hard water with 100% of treated water and 1-½ turn = 50% of hard water with 50% of treated water).

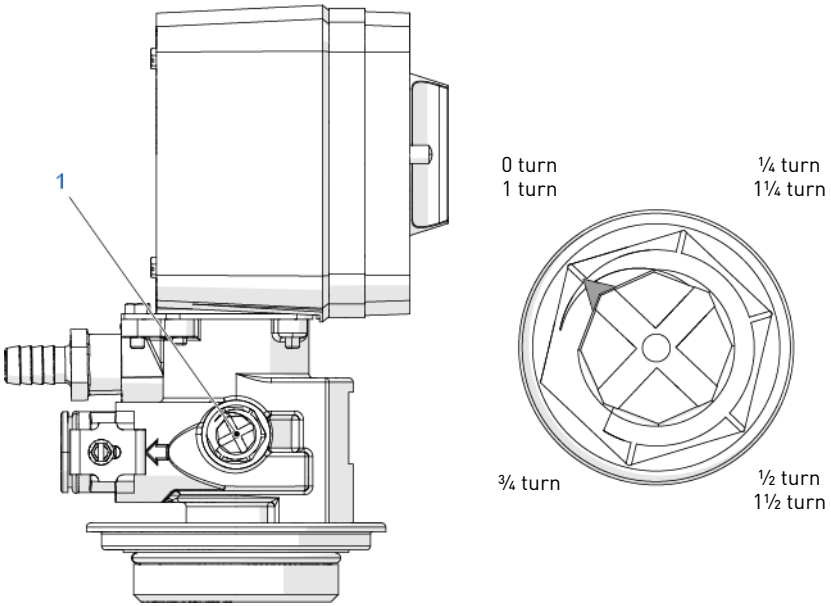

Fast regeneration

This option allows the valve to regenerate in 90 minutes instead of 180 minutes.

Note
This valve can only be fitted with tanks up to 10".

Low water usage piston (L.W.U.)

With this piston, water consumption during regeneration can be reduced.

4. System sizing

4.1. Recommendations

4.1.1. Injector/DLFC/BLFC-Valve configuration

Valve type	Diameter	Resin volume	Injector				DLFC	BLFC	
	[in]	L	DF	Color	UF	Color	[gpm]	DF [gpm]	UF [gpm]
4600/ 1600 1650	6	5 - 8	0	Red	N/A	N/A	0.8	0.125	N/A
	7	9 - 14					1.2	0.25	
	8	15 - 21	1	White			1.5		
	9	22 - 28					2.0		
	10	29 - 42					2.4		
	12	43 - 56	2	Blue			3.5	0.50	
	13	57 - 70					4.0		

4.2. Sizing a softener (single unit)

4.2.1. Parameters to be considered

Whenever installing a softener, it is preferable to have full water analysis to ensure the inlet water content will not affect the resin bed.

Note
Please consult your resin manufacturer specifications to ensure that no additional pretreatment prior to softening is required.

The below sizing method can be applied for both residential and industrial softeners.
The sizing of a softener must be based upon certain parameters:

- inlet water hardness;
- peak flow rate and nominal flow rate;
- service velocity;
- salt dosage.

The softening and regeneration reactions are driven under certain conditions. To allow these reactions to take place, make sure that the velocity is convenient during the different phases for proper ion exchange. This velocity is given in the resin manufacturer specifications sheet.

Depending on the inlet water hardness, the service velocity for standard softening must be between:

Service velocity [bed volume per hour]	Inlet water hardness [mg/l as $CaCO_3$]	°f °TH	°dH
8 - 40	<350	<35	<19.6
8 - 30	350 to 450	35 - 45	19.6 - 25.2
8 - 20	>450	>45	>25.2

Note
Failure to respect the service velocity will lead to hardness leakage or even total softener inefficiency.

Note that the water supply piping size may also be useful when estimating the nominal flow rate, since the size of the piping allows a maximum flow rate to pass. Assuming the maximum velocity of water in pipes is about 3 m/s, a good estimation for most common pressure [3 bar] and temperature [16°C] is:

Piping size (internal diameter)		Max. flow rate
[in]	[mm]	[m^3/h at 3 m/s]
0.5	12	1.22
0.75	20	3.39
1	25	5.73

Piping size (internal diameter)		Max. flow rate
[in]	[mm]	[m^3/h at 3 m/s]
1.25	32	8.69
1.5	40	13.57
2.0	50	21.20
2.5	63	34.2
3.0	75	49.2

4.2.2. Determining the required volume of resin

When sizing a softener, make sure that the volume of resin in the tank (bed volume) will be sufficient so that even when the peak flow rate is reached, the velocity is still between the above values depending on the hardness. When sizing a softener, always choose the resin volume and tank size based on the peak flow rate but not on the nominal flow rate.

Note
Sizing on the nominal flow rate without taking the peak flow rate into account would result in choosing smaller tank size and resin volume, and may lead in severe hardness leakage during the service cycle when the peak flow is reached.

The maximum softened water flow rate that a softener can produce is given by the following formula:

$$Q_{service\ max} = Fs_{service} \times BV$$

with:
$Q_{service\ max}$: service flow rate [m^3/h]
$Fs_{service}$: service velocity [BV/h]
BV: bed volume of resin [m^3]

Knowing this required volume of resin, it is possible now to determine the tank you need. Note that at least a third of the total volume of the tank must be kept as free space so that the bed expansion during backwash is sufficient to ensure correct cleaning of the resin.

4.2.3. Resin exchange capacity and capacity of the unit

The resin exchange capacity and capacity of the unit are two different things that should not be confused. The resin exchange capacity is the amount of Ca^{2+} and Mg^{2+} that can be retained by 1 litre of resin, which will depend on the resin type and salt dosage, whereas the capacity of the unit is the capacity of the system, which will depend on the volume of resin and resin exchange capacity.

Knowing the required volume of resin, you can determine the exchange capacity of the unit. The capacity of the unit can be expressed in different ways:

- the mass capacity, which corresponds to the weight in equivalent $CaCO_3$ that can be fixed on the resin, expressed in kg as $CaCO_3$;
- the volume capacity, which represents the maximum amount of water that can be treated between two regenerations. This last capacity takes into account the hardness of the water to be treated and is expressed in m^3 or litres;
- the combined capacity, which represents the volume of water that could be treated between two regenerations if the inlet hardness is 1 °f or °dH. This capacity is expressed in °f.m^3 or °dH.m^3.

The resin exchange capacity will depend on the amount of salt to be injected into the resin bed during the regeneration. This amount of salt is given in grams per litre of resin. The next table is showing the resin exchange capacity in function of the amount of salt for a system with standard efficiency regeneration.

Resin exchange capacity as a function of the salt dosage:

Salt amount [g/L_{resin}]	Corresponding resin exchange capacity in [g/L_{resin}] as $CaCO_3$	°f.m^3 [per L_{resin}]	°dH.m^3 [per L_{resin}]
50	29.9	2.99	1.67
60	34	3.4	1.9
70	37.5	3.75	2.09
80	40.6	4.06	2.27
90	43.4	4.34	2.42
100	45.9	4.59	2.56
110	48.2	4.82	2.69
120	50.2	5.02	2.8
130	52.1	5.21	2.91
140	53.8	5.38	3.01
150	55.5	5.55	3.1

Salt amount [g/L_{resin}]	Corresponding resin exchange capacity in [g/L_{resin}] as $CaCO_3$	°$f.m^3$ [per L_{resin}]	°$dH.m^3$ [per L_{resin}]
170	58.5	5.85	3.27
200	62.7	6.27	3.5
230	66.9	6.69	3.74
260	71	7.1	3.97
290	75.3	7.53	4.21

To calculate the system mass capacity:

$M_{capacity} = V_{resin} \times C_{resin\ ex}$

with:
$M_{capacity}$: system mass capacity [g as $CaCO_3$]
V_{resin}: volume of resin [L]
$C_{resin\ ex}$: resin exchange capacity [g/L_{resin} as $CaCO_3$]

To calculate the system combined capacity:

$C_{capacity} = V_{resin} \times C_{cor\ resin\ ex}$

with:
$C_{capacity}$: system combined capacity [°$f.m^3$ or °$dH.m^3$]
V_{resin}: volume of resin [L]
$C_{cor\ resin\ ex}$: corresponding resin exchange capacity [°$f.m^3$/l or °$dH.m^3$/l]

To calculate the system volume capacity:

$V_{capacity} = M_{capacity} / TH_{inlet}$

or

$V_{capacity} = C_{capacity} / TH_{inlet}$

with:
$V_{capacity}$: system volume capacity [m^3]
$M_{capacity}$: system mass capacity [g as $CaCO_3$]
$C_{capacity}$: system combined capacity [°$f.m^3$ or °$dH.m^3$]
TH_{inlet}: inlet water hardness [mg/L as $CaCO_3$ or °f or °dH]

Caution
If a mixing device is set on the valve before meter, $TH = TH_{inlet} - TH_{outlet}$.

Having determined the previous capacity allows the operator to know the service cycle duration.

4.2.4. Valve configuration

Knowing the volume of resin, tank size and specifications of the resin, it is possible to determine the required valve configuration. The resin specification will give the backwash velocity, as well as the brine draw and slow rinse velocity that must be respected in order to ensure a proper regeneration of the unit. From this data, determine the required backwash flow rate as well as the brine draw and slow rinse flow rate. In most cases, the fast rinse flow rate will be the same as the backwash flow rate, however for certain valve types the fast rinse flow rate will be the same as the service flow rate.

To determine the backwash flow rate:

$Q_{backwash} = Fs_{backwash} \times S$

with:
$Q_{backwash}$: backwash flow rate [m^3/h]
$Fs_{backwash}$: backwash velocity [m/h]
S: $Tank_{cross\ section\ area}$ [m^2]

The DLFC installed on the valve has to limit the backwash flow rate to the above calculated flow rate.

To determine the injector size:

The velocities to be respected for brine draw and slow rinse are given on the resin manufacturer specifications. Generally speaking, the injector has to allow a flow rate of about 4 BV / h (corresponding to the flow rate of brine being drawn added to the flow rate of raw water passing through the injector nozzle to create the suction effect).

$Q_{Inj} = 4 \times BV / h$

with:
Q_{inj}: total flow rate passing through the injector [L/h]
BV: bed volume of resin [L]

Note
This value does not correspond to the brine draw flow rate but to the total flow rate passing through the injector. Then refer to the injector diagrams at the inlet pressure in order to check if the injector will give a correct flow rate. See chapter 4.4. Injector flow rates, page 30.

4.2.5. Cycle time calculation

Note
The mechanical controller uses fixed times.

4.3. Salt amount definition

The salt setting is done through the controller programming.

4.4. Injector flow rates

The following graphics represent the injectors flow rate as a function of the inlet pressure for the different injector sizes.

4.4.1. 1600 Injectors

INJECTOR 0

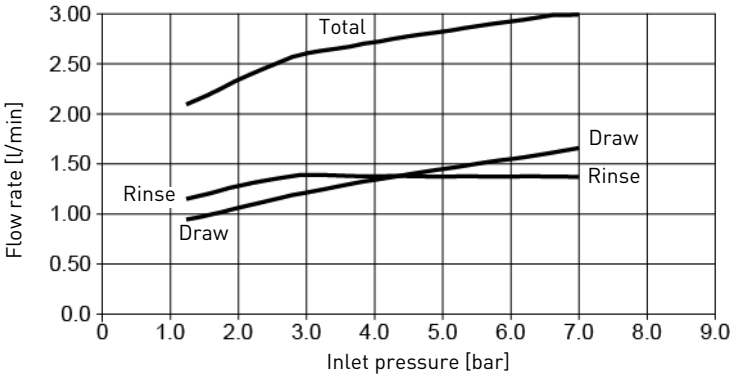

INJECTOR 1

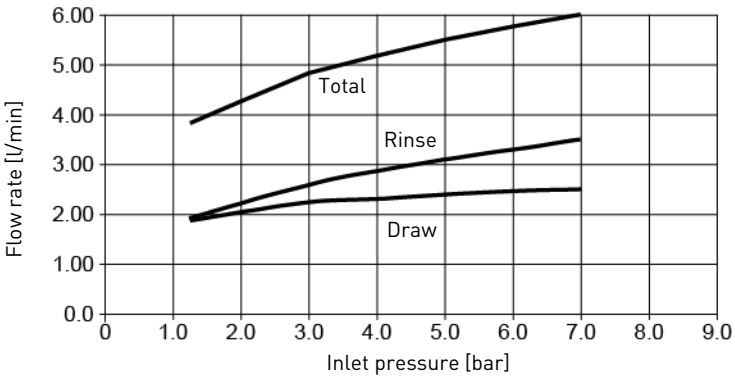

INJECTOR 2

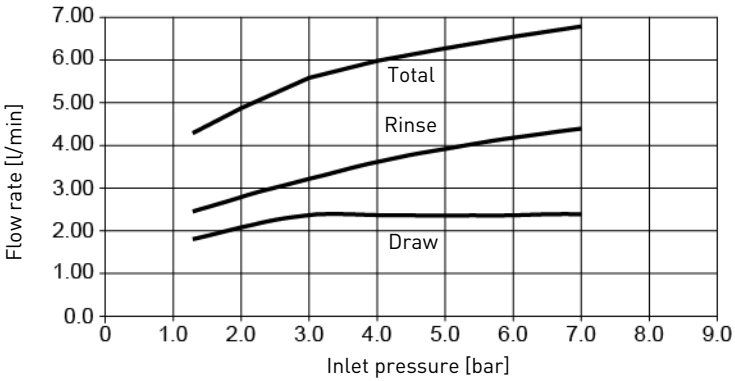

4.4.2. 1650 Injectors

INJECTOR 0

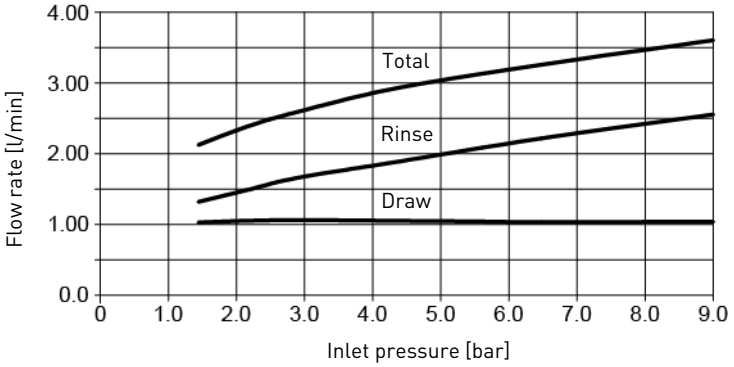

INJECTOR 1

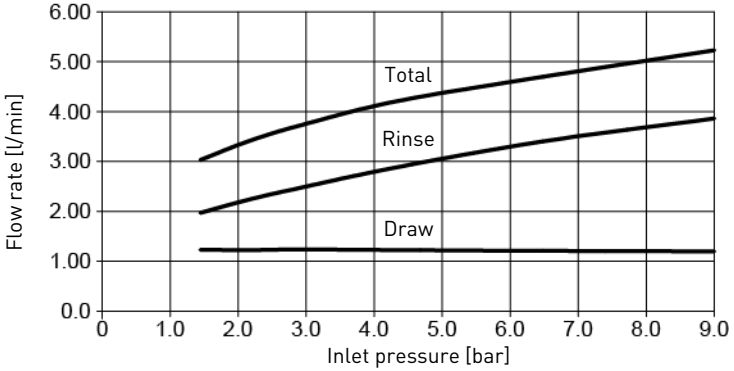

INJECTOR 2

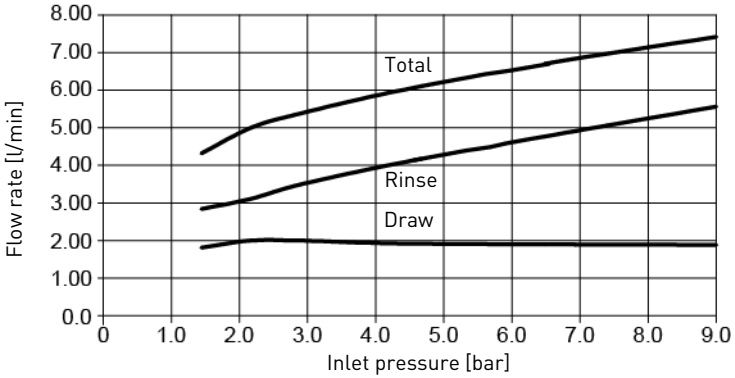

5. Installation

Mandatory
It is strictly forbidden for not qualified personal, to accede to system's internal parts to perform any kind of technical action. Be sure to disconnect the electrical power, close the water inlet and depressurize the system before opening the front cover to access internal parts.

5.1. Warnings

The manufacturer will not be held liable for any damages to people or properties resulting from an improper use of the device not compliant with the following instructions.
Whenever this guide doesn't clarify all doubts about installation, service or maintenance, please contact the technical support of the company that has installed the device.
Device installation must be done by a qualified technician according to the current standards and regulations, using tools compliant with the device for a safe use and referring to that technician also for device maintenance.
In case of out of order or malfunction, before performing any kind of action on the device, please ensure to have disconnected the transformer from the power source, to shut off inlet water supply to the valve and to drain water pressure opening a tap down-line of the valve.

1. Be careful when removing the valve from the box and during subsequent handling, weight is liable to cause damage to property and persons in case of accidental impact.
2. Before sending the water on the valve, make sure that all plumbing connections are tight and properly implemented in order to avoid dangerous leaks of pressurized water.
3. Use caution when installing welded metal piping near the valve, the heat may damage the plastic body of the valve and the bypass.
4. Be careful not to let the full weight of the valve rest on fittings, pipes or bypass and vice versa.
5. Make sure that the environment in which the valve is installed does not reach water freezing temperatures, the valve may be damaged.
6. Make sure that the tank containing the resin is vertical, otherwise the resin could enter in the valve and damage it.

5.2. Safety notices for installation

- Observe all warnings that appear in this manual;
- only qualified and professional personnel are authorized to carry out installation work.

5.3. Installation environment

5.3.1. General

- Use only brine salts designed for water softening. Do not use ice melt salt, block, or rock salts;
- keep the media tank in the upright position. Do not turn on its side, upside down, or drop. Turning the tank upside down may cause media to enter the valve or plug the upper screen;
- follow State and local codes for water testing. Do not use water that is micro-biologically unsafe or of unknown quality;

- when installing the water connection (bypass or manifold) first connect to the plumbing system. Allow heated parts to cool and cemented parts to set before installing any plastic parts. Do not get primer or solvent on O-rings, nuts, or the valve.

5.3.2. Water

- Water temperature must not exceed 43°C;
- a minimum of 1.4 bar (dynamic pressure on injector) of water pressure is required for the regeneration valve to operate effectively.

Mandatory
Do not exceed a maximum of 8.6 bar inlet pressure. Should this happen or be subject to happen, it is necessary to install a pressure regulator upstream the system.

5.3.3. Electrical

There are no user-serviceable parts in the AC/DC transformer, motor or controller. In the event of a failure, these should be replaced.

- All electrical connections must be completed according to local codes;
- use only the power AC/DC transformer that is supplied;

Mandatory
The use of any other power transformer than the one supplied void the warranty of all electronic parts of the valve.

- the power outlet must be grounded;
- to disconnect power, unplug the AC/DC transformer from its power source;
- an uninterrupted current supply is required. Please make sure that the voltage supply is compatible with the unit before installation;
- make sure the controller power source is plugged in;
- if the electrical cable is damaged, it must imperatively be replaced by qualified personnel.

5.3.4. Mechanical

- Do not use petroleum-based lubricants such as vaseline, oils, or hydrocarbon-based lubricants. Use only 100% silicone lubricants;
- all plastic connections should be hand tightened. PTFE (plumber's tape) may be used on connections that do not use an O-ring seal. Do not use pliers or pipe wrenches;
- existing plumbing should be in a good shape and free from limescale. In case of doubt, it is preferable to replace it;
- all plumbing must be completed according to local codes and installed without tension or bending stresses;
- soldering near the drain line should be done before connecting the drain line to the valve. Excessive heat will cause interior damage to the valve;
- do not use lead-based solder for sweat solder connections;

- the riser tube should be cut flush with the top of the tank. Slightly bevel the ridge in order to avoid deterioration of the seal whilst fitting the valve;
- the drain line must be a minimum of 12.7 mm (½") in diameter. Use 19 mm (¾") pipe if the backwash flow rate is greater than 26.5 lpm (7 gpm) or the pipe length is greater than 6 m (19 ft 8 in);
- do not support the weight of the system on the valve fittings, plumbing, or the bypass;
- it is not recommended to use sealants on the threads. Use PTFE (plumber's tape) on the threads of the drain elbow, and other NPT/BSP threads;
- the installation of a prefilter is always recommended (100µ nominal);
- valve inlet/outlet must be connected to main piping via flexible.

5.4. Integration constraints

Location of a water treatment system is important. The following conditions are required:

- flat and firm level platform or floor;
- room to access equipment for maintenance and adding brine (salt) to tank;
- constant electrical supply to operate the controller;
- total minimum pipe run to water heater of 3 m to prevent backup of hot water into system;
- always install check valve before water heater to protect the softener from hot water return;
- local drain for discharge as close as possible;
- water line connections with shut off or bypass valves;
- must meet any local and state codes for site of installation;
- valve is designed for minor plumbing misalignments. Do not support weight of system on the plumbing;
- be sure all soldered pipes are fully cooled before attaching plastic valve to the plumbing.

5.5. Valve connection to piping

The connections should be using PTFE (plumber's tape) on the threads if using the threaded connection type.
In case of heat welding (metal type connection), the connections should not be made to the valve when soldering.

Note
See chapter 3.3. Description and components location, page 17 to identify the connections.

5.5.1. Top-mounted valve installation

When pressurized, any composite tank will expand both vertically and circumferential. In order to compensate the vertical expansion, the piping connections to the valve must be flexible enough to avoid overstress on the valve and tank.

In addition, the valve and tank should not be supporting any part of the piping weight. This is hence compulsory to have the piping fixed to a rigid structure (e.g. frame, skid, wall, ...) so that the weight of it is not applying any stress on the valve and tank.

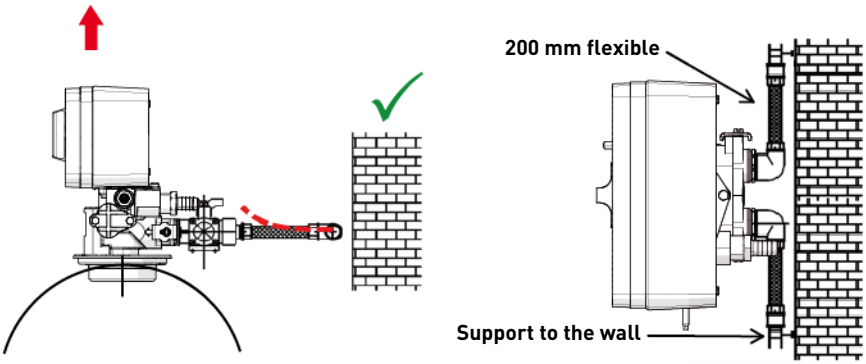

- The diagrams above illustrate how the flexible piping connection should be mounted;
- in order to adequately compensate the tank elongation the flexible piping must be installed **horizontally**;
- should the flexible piping connection be installed in vertical position, instead of compensating the elongation, it will create additional stresses on the valve & tank assembly. Therefore this is to be avoided;
- the flexible piping connection must also be installed stretched, avoiding excessive length. For instance 20 - 40 cm is enough;
- excessively long and non-stretched flexible piping connection will create stresses on the valve and tank assembly when the system is pressurized, as illustrated in the below picture: on the left the assembly when the system is unpressurised, on the right the flexible piping connection when put under pressure tends to lift up the valve when stretching up. This configuration is even more dramatic when using semi-flexible piping;
- failure to provide enough vertical compensation may lead to different kinds of damage, either on the valve thread which connects to the tank, or on the female thread connection of the tank that connects to the valve. In some cases, damage may also be seen on the valve inlet and outlet connections;

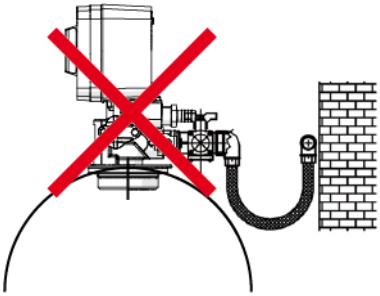

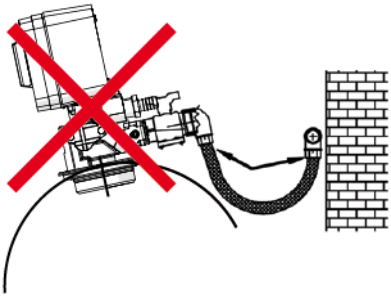

- in any case, any failure caused by improper installation and/or piping connections may void the warranty of Pentair products;
- in the same way, using lubricant* on the valve thread is not allowed and will void the warranty for the valve and tank. Indeed using lubricant there will cause the valve to be over-torqued, which may lead to valve thread or tank thread damage even if the connection to piping has been done following the above procedure.

*Note: Use of petroleum-based grease and mineral based lubricant is totally forbidden, not only on the valve thread, since plastics used (especially Noryl) will highly suffer from contact with this type of grease, leading into structural damage hence to potential failures.

5.6. Block diagram and configuration example

Block diagram

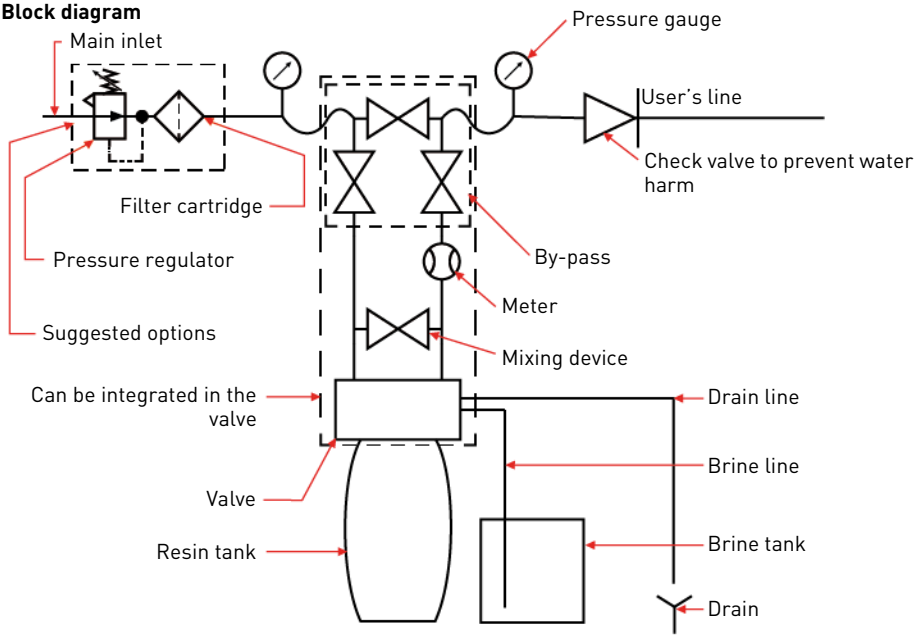

Configuration example

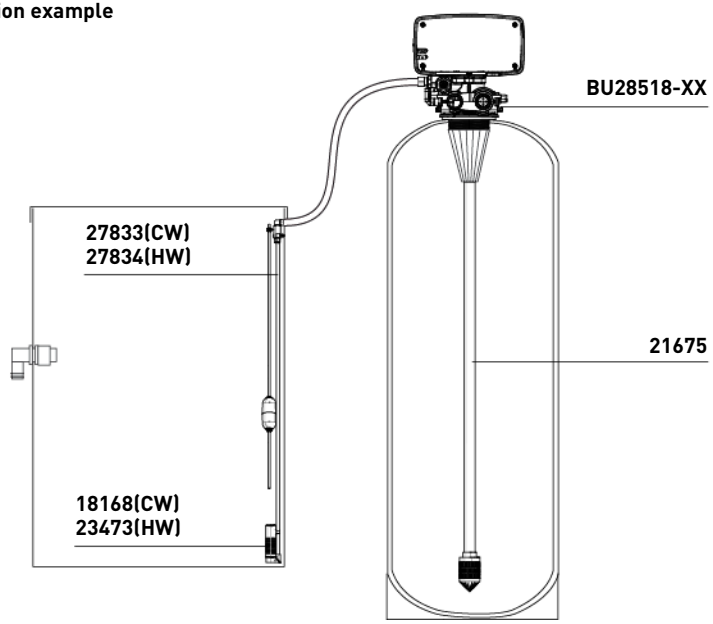

5.7. Regeneration types

Volumetric

The controller monitors the volume of water used. Once it calculates that system capacity is reached, a regeneration cycle will be initiated immediately or at a pre-set time.

- **Immediate control:** The controller measures water usage and regenerates the system as soon as the system capacity is reached;
- **delayed control:** The controller measures water usage and regenerates the system, at the specified regeneration time (02h00), after the system capacity is reached.

Time clock control

This control regenerates the system on a weekly schedule. The schedule is defined on the skipper wheel The control will initiate a regeneration cycle on days that have been set to "ON".

The system can be set to regenerate on one to every days of the week or on a 2, 3, 4, 6 or 12 days period.

5.8. Electrical connections

With lights

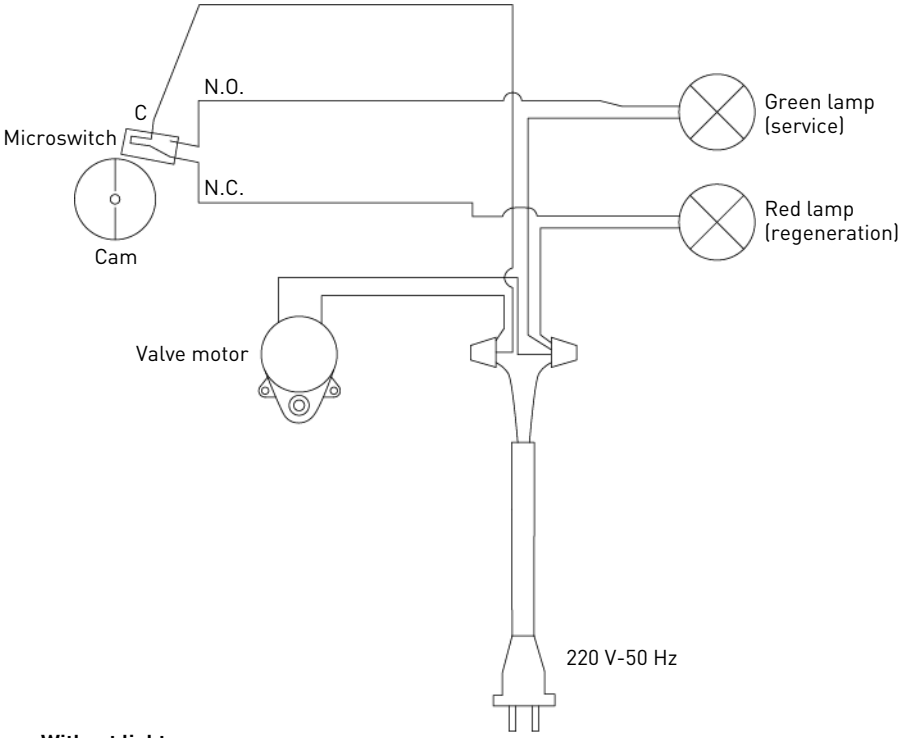

Without lights

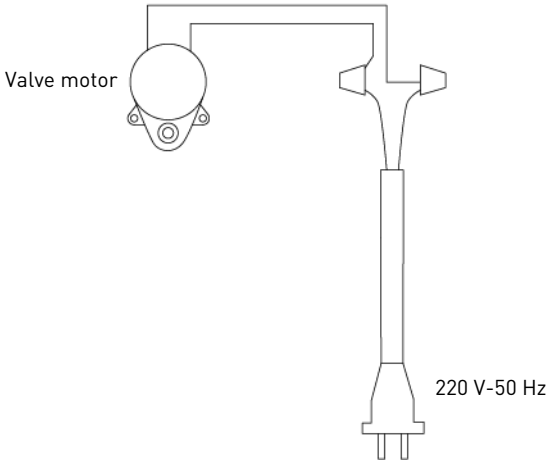

5.9. By-passing

A bypass valve system should be installed on all water conditioning systems. Bypass valves isolate the softener from the water system and allow unconditioned water to be used. Service or routine maintenance procedures may also require that the system is bypassed.

Normal operation

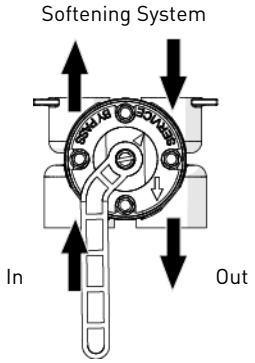

In Bypass

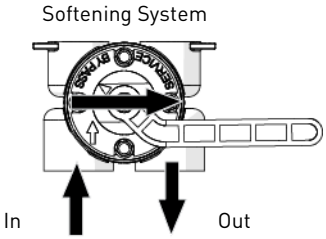

Caution
Do not solder pipes with lead-based solder.

Caution
Do not use tools to tighten plastic fittings. Over time, stress may break the connections.

Caution
Do not use petroleum grease on gaskets when connecting bypass plumbing. Use only 100% silicone grease products when installing any plastic valve. Non-silicone grease may cause plastic components to fail over time.

5.10. Drain line connection

Note
Standard commercial practices are expressed here. Local codes may require changes to the following suggestions. Check with local authorities before installing a system.

Caution
The drain line plastic elbow must always be hand-tighten without using the elbow as a lever.

Caution
The drain plastic elbow is not designed to support the weight of the tube. The tube has to have its own support.

Caution
Do not over tighten the hose tightening ring on its plastic support.

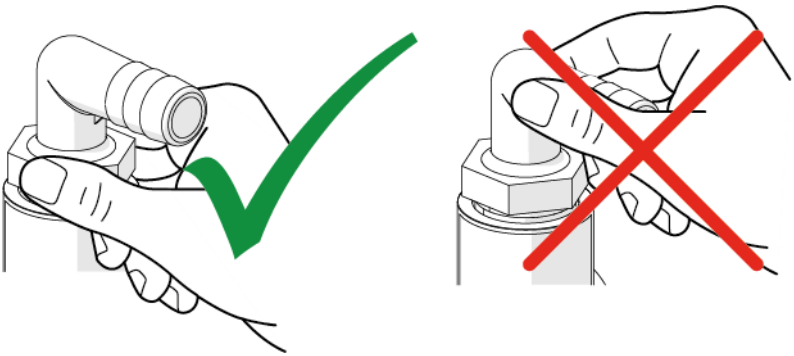

Preferably, the unit should not be more than 6.1 m from the drain. Use an appropriate adapter fitting to connect plastic tubing to the drain line connection of the valve.

If the backwash flow rate exceeds 22.8 lpm or if the unit is located 6.1-12.2 m from the drain, use 19.0 mm (¾") tubing. Use appropriate fittings to connect the 19.0 mm (¾") tubing to the 12.7 mm (½") drain connection on the valve.

The drain line may be elevated up to 1.8 m providing the run does not exceed 4.6 m and water pressure at the softener is not less than 2.76 bar. Elevation can increase by 61 cm for each additional 0.69 bar of water pressure at the drain connector.

Where the drain line is elevated but empties into a drain below the level of the valve, form a 18 cm loop at the far end of the line so that the bottom of the loop is level with the drain line connection. This will provide an adequate siphon trap.

Where the drain empties into an overhead sewer line, a sink-type trap must be used.

Secure the end of the drain line to prevent it from moving.

Note
Waste connections or the drain outlet shall be designed and constructed to provide connection to the sanitary waste system through an air-gap of 2 pipe diameters or 50.8 mm (2"), whichever is larger.

Caution
Never insert the drain line directly into a drain, sewer line or trap. Always allow an air gap between the drain line and the wastewater to prevent the possibility of sewage being back-siphoned into the softener.

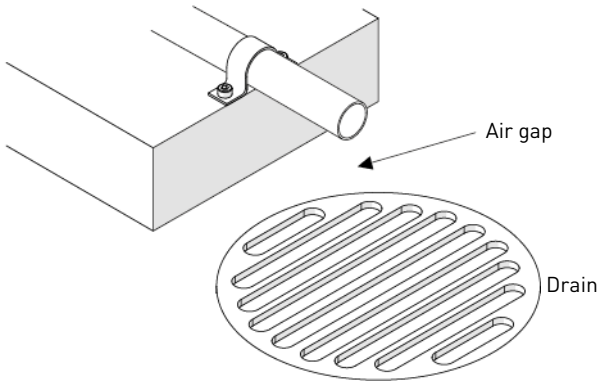

5.11. Overflow line connection

In the event of a malfunction, power failure, etc, the brine tank overflow fitting will direct "overflow" to the drain instead of spilling on the floor. This fitting should be on the side of the cabinet or brine tank. Most tank manufacturers include a post for the tank overflow connector.

To connect the overflow line, locate the hole on side of tank. Insert overflow fitting into tank and tighten with plastic thumb nut and gasket as shown below. Attach a length of 12.7 mm (½") I.D. tubing (not supplied) to fitting and run to drain.

Do not elevate overflow higher than overflow fitting.

Do not tie into drain line of controller unit. Overflow line must be a direct, separate line from overflow fitting to drain, sewer or tub. Allow an air gap as per drain line instructions.

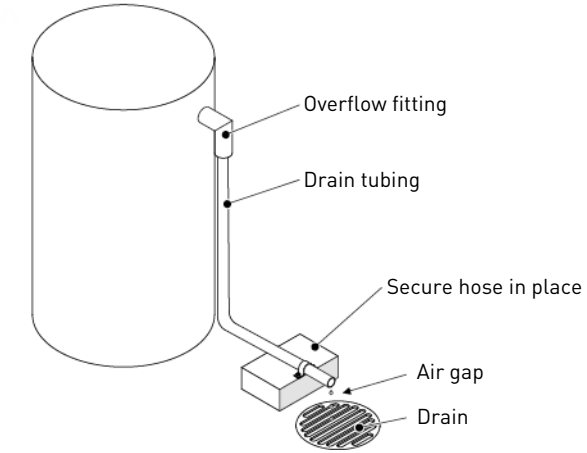

Caution
Floor drain is always recommended to avoid flooding in case of overflow.

5.12. Brine line connection

The brine line from the tank connects to the valve. Make the connections and hand tighten. Be sure that the brine line is secure and free from air leaks. Even a small leak may cause the brine line to drain out, and the softener will not draw brine from the tank. This may also introduce air into the valve, causing problems with the valve operation.

Most installations utilize a tank check valve.

6. Programming

6.1. Time of day

No.	Operation
A	Press the clutch (**1**).
B	Turn the hour wheel (**2**) to display the correct hour in the window (**3**).

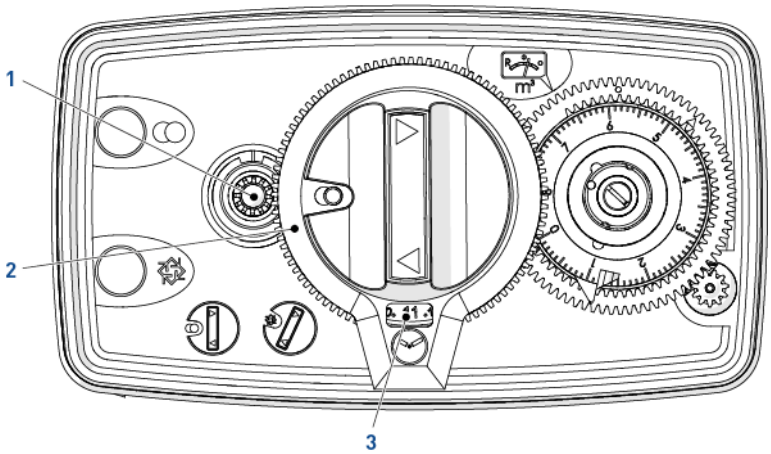

6.2. Volumetric

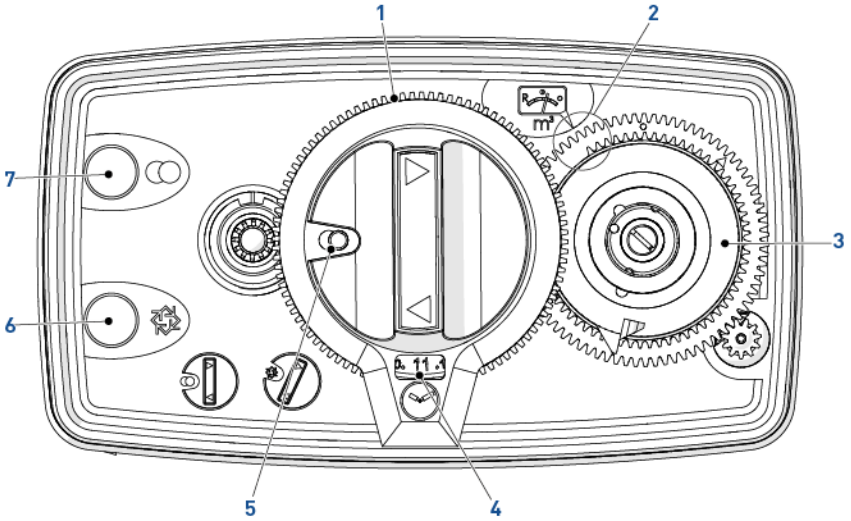

1. 24 hour wheel
2. Available capacity → Shows the system remaining capacity.
3. Program wheel → Defines the system capacity in m^3.
4. Time of day → Shows the current time.
5. Service position
   → Service;
   → Regeneration;
   → Backwash;
   → Brine draw/slow rinse;
   → Brine refill.
6. Red lamp → Lights when the valve regenerate.
7. Green lamp → Lights when in service.

6.2.1. Calculating the system capacity

Set the capacity of soft water between two regenerations using the following formula:

Water capacity [m^3] = (Exchange capacity [m^3°tH] - Reserve capacity [m^3]) / Water hardness [°tH]

6.2.2. Set the system capacity

No.	Operation
A	Lift the transparent disc (**1**) and display the capacity facing the white dot (**2**).
	Note Example for the following drawing, the capacity set is 5.8 m^3 between two regenerations.

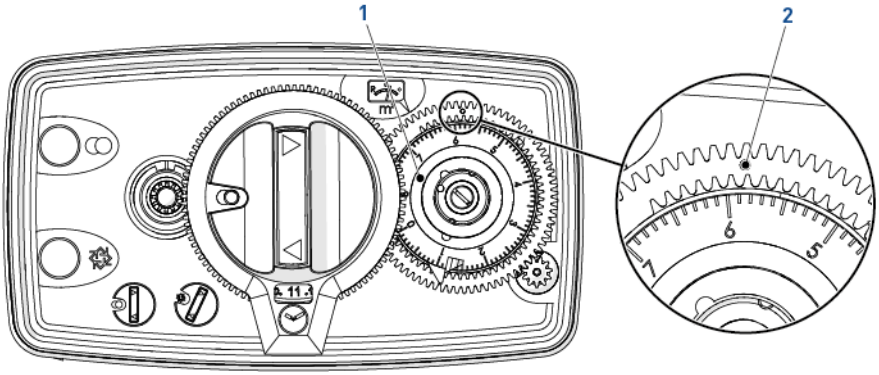

6.3. Time clock

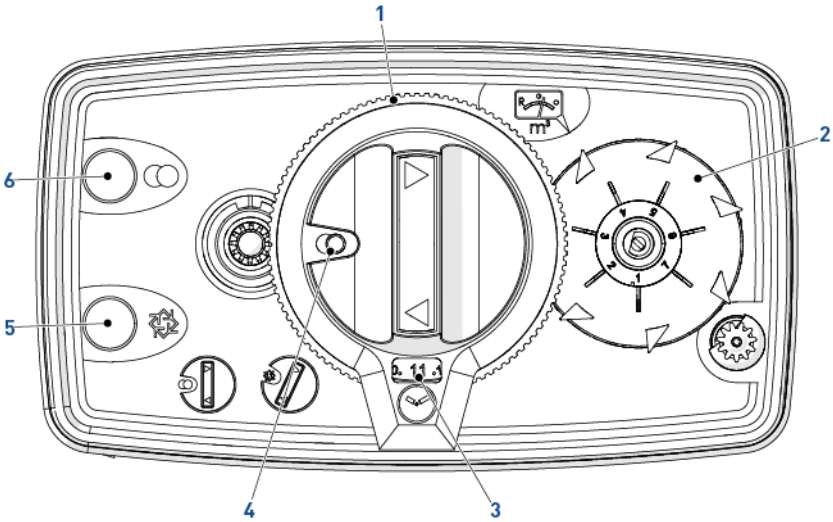

1. 24 hour wheel
2. Program wheel → Defines the number of days between two regenerations.
3. Time of day → Shows the current time.
4. Service position → Service;
   → Regeneration;
   → Backwash;
   → Brine draw/slow rinse;
   → Brine refill.
5. Red lamp → Lights when the valve regenerate.
6. Green lamp → Lights when in service.

6.3.1. Calculating the number of days between two regenerations

Set the number of days between two regenerations using the following formulas:

Water capacity [m^3] = (Exchange capacity [m^3°tH] - Reserve capacity [m^3]) / Water hardness [°tH]

Number of days between regenerations = Water capacity [m^3] / Daily water consumption [m^3]

6.3.2. Set the number of days between two regenerations

No.	Operation
A	Push the pins (**1**) out to set up.
	Note There are two time clock wheels: • 7 days: based on the week, number 1 will refer to Monday, number 7 to Sunday; • 12 days: allows to set a regular interval every 2, 3, 4 or 6 days.
	Note Example for the following drawing, the regeneration will occurs on Monday and Thursday.

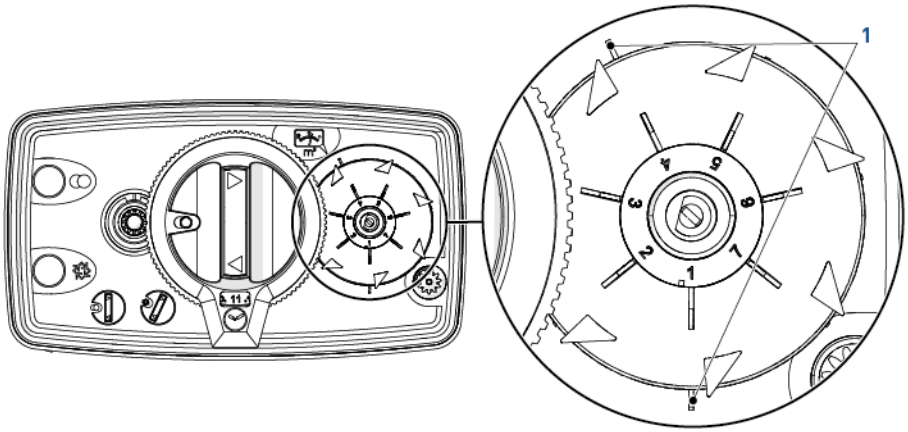

6.4. Salt volume per regeneration

6.4.1. Salt volume definition

Set the weight of salt to be used during regeneration using the following table and formula.

Salt weight [g/L_{resin}]	Exchange capacity [$°tH/m^3/L_{resin}$]	Salt weight [$g/°tH/m^3$]
80	4	20
125	5	25
180	6	30

Weight of salt to be set = Volume of resin [L] x Salt weight [g/L_{resin}]

Example

16 liters of resin x 125 g = 2000 g (2 kg of salt)

6.4.2. Set the salt volume per regeneration

No.	Operation
A	Calculate the weight of salt needed per regeneration, see 6.4.1. Salt volume definition, page 50.
B	Remove the screws (**2**) and the cover (**1**).
C	Loosen (**5**).
D	Adjust the segment of the brine cam (**4**) to the value calculated at point **A** on the sticker (**3**).
E	Tighten (**5**).
F	Replace the screws (**2**) and the cover (**1**).
	Note Example for the following drawing, the weight of salt set is 2 kg per regeneration.

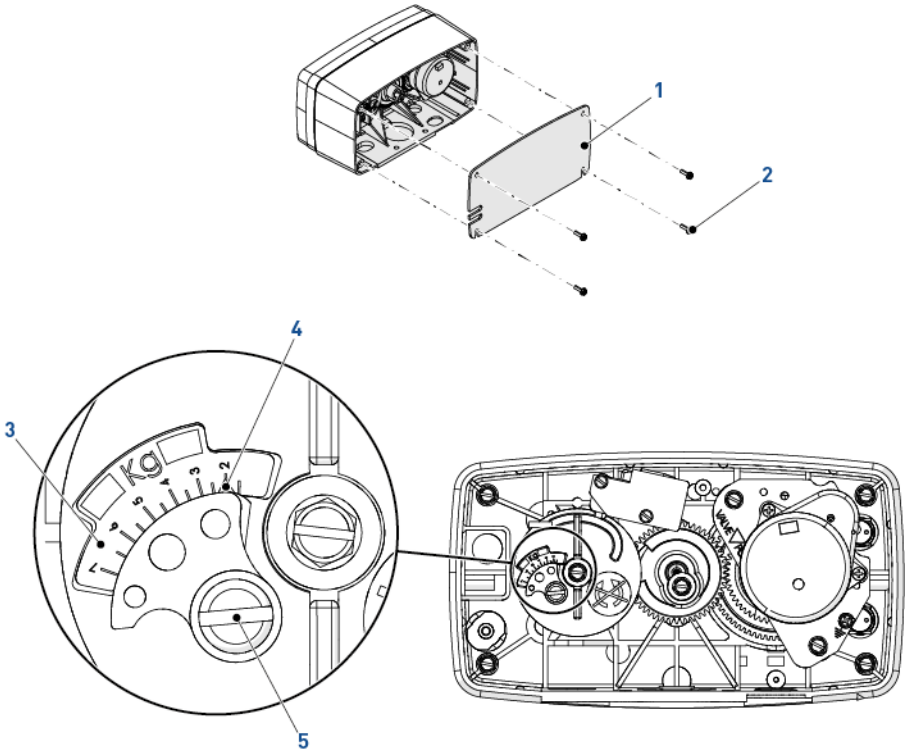

7. Commissioning

Note
This chapter is available for standard regeneration types. Contact your supplier if the actual regeneration is not standard and if you need assistance.

7.1. Water filling, draining and waterproofness inspection

7.1.1. Activating the softener

A With the bypass still in Bypass position (inlet and outlet of the valve closed), proceed to programming according to your system specification if not done yet.
B Turn ON the main water supply.
C Open a cold water faucet nearby and let run a few minutes or until the system is free from foreign material (usually solder) that may have resulted from the installation.
D Once the faucet runs clear, put the bypass slowly in service position.
E The valve and tank will slowly get filled with raw water, allowing air to be purged by the drain and/or by the open faucet next to the system. Open the inlet progressively until fully open position. Let run until the air is purged from the unit.
F Close the water faucet nearby.
G Plug the valve to a power source. Check that the valve is in service position.
H Fill approximately 25mm of water above the grid plate, (if used). Otherwise, fill to the top of the air check in the brine tank. Do not add salt to the brine tank at this time.
I Initiate a manual regeneration, bring the valve into "brine draw and slow rinse position" in order to draw water from the brine tank until the blockage of the air check; the water level will be approximatively in the middle of the air check.
J Open a cold water faucet and let the water run in order to drain the air out of the circuit.
K Bring the valve in brine refill position and let it get back to service position automatically.
L Close the cold water faucet.
M Fill the brine tank or cabinet with salt. You may want to mark the level of water in the brine tank/ cabinet when completely refilled with water and full of salt. In the future, after each regeneration, you can visually control that the quantity of water refilled should be between the two marks done. Marking are optional, but may allow to visually detect any irregularity during regeneration that may lead to softener inefficiency.
N With the brine tank completely refilled and full of salt, adjust the safety brine valve in the brine well. Make sure the overflow elbow is installed above the float level.
O After the softener has been running a few minutes in service, proceed to hardness test on outlet water to make sure the water is treated as per requirements.

The system is ready and in service.

7.2. Sanitization

7.2.1. Disinfection of water softeners

The materials of construction of the modern water softener will not support bacterial growth, nor will these materials contaminate a water supply. In addition, during normal use, a softener may become polluted with organic matter, or in some cases with bacteria from the water supply. This may result in an off-taste or odor in the water.

Thus, your softener may need to be disinfected after installation. Some softeners will require periodic disinfection during their normal lifetime. Consult your installing dealer for more information on disinfecting your softener.

Depending on the conditions of use, the softener type, the type of ion exchanger, and the disinfectant available, a choice can be made among the following methods.

7.2.2. Sodium or calcium hypochlorite

These materials are satisfactory for use with polystyrene resins, synthetic gel zeolite, greensand and bentonites.

5.25% Sodium hypochlorite

If stronger solutions are used, such as those sold for commercial laundries, adjust the dosage accordingly.

Dosage

Polystyrene resin: set 1.25 mL fluid per 1 L of resin.

Non-resinous exchangers: set 0.85 mL fluid per 1 L.

Brine tank softeners

Backwash the softener and add the required amount of hypochlorite solution to the well of the brine tank. The brine tank should have water in it to permit the solution to be carried into the softener.

Proceed with the normal regeneration.

Calcium hypochlorite

Calcium hypochlorite, 70% available chlorine, is available in several forms including tablets and granules. These solid materials may be used directly without dissolving before use.

Do not let the disinfectant stand for more than 3 hours in the brine tank before the regeneration start.

Dosage

Measure two grains ~ 0.11 mL for 1 L.

Brine tank softeners

Backwash the softener and add the required amount of hypochlorite to the well of the brine tank. The brine tank should have water in it to permit the chlorine solution to be carried into the softener.

Proceed with the normal regeneration.

7.2.3. Electro chlorination

Valves or systems already equipped with an electrochlorinator device or system will be sanitized during the brine draw phase.

8. Operation

8.1. Display during operation

8.1.1. During service

Example:

- valve in service:

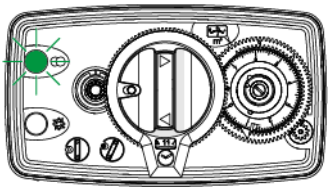

8.1.2. During regeneration

During a regeneration the display shows the current cycle step.

Examples:

- backwash:

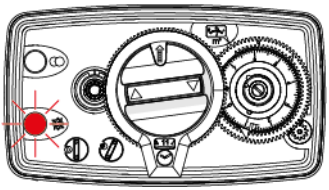

- brine draw & slow rinse:

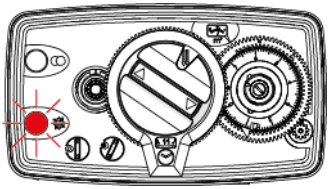

- brine refill:

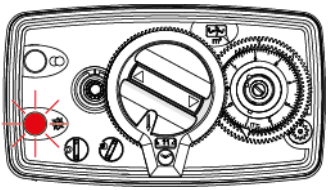

8.2. Recommendations

- Use only regeneration salts designed for water softening upon regulation EN973;
- for optimal system operation, the use of clean salt and impurities free is recommended (for example salt pellets);
- the sanitizing process (both with liquid and electrochlorination) may introduce chlorine compounds which may reduce the lifetime of the ion exchange resins. Refer to the technical guides for resins in common use, providing necessary checks on the system.

8.3. Manual regeneration

Mandatory
The controller must be in service in order to enable this procedure.

8.3.1. Manual immediate regeneration

No.	Operation
A	Turn the control knob (**3**) until appears in the window (**2**) and the red light (**1**) lights.

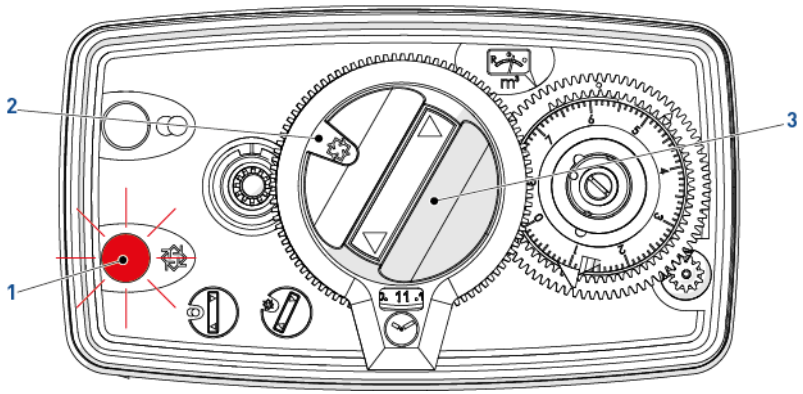

8.3.2. To advance regeneration cycles

No.	Operation
A	Turn the control knob (**3**) until the desired cycle appears in the window (**2**).

8.4. Operation during a power failure

- The valve stops in its actual position during power failure.

9. Maintenance

Mandatory
Cleaning and maintenance shall take place at regular intervals in order to guarantee the proper functioning of the complete system, and be documented in the Maintenance chapter in the User Guide document.

Mandatory
The maintenance must be done by a professional certified by Pentair, otherwise the warranty will void.

9.1. Recommendations

9.1.1. Use original spare parts

Caution
To ensure correct operation and safety of the device, only use original spare parts and accessories recommended by the manufacturer.
Usage of non-genuine spare parts void all warranties.

Parts to keep in stock for potential replacements are the pistons, S&S kit, injectors, optical sensor and motors. Refer to maintenance sheet.

9.1.2. Use original approved lubricants

- Dow Corning #7 Release Agent.

9.1.3. Maintenance instructions

- Disinfect and clean the system at least once a year or if the treated water has an off-taste or an unusual odor;
- perform a hardness test every year of both inlet and treated water.

9.2. Cleaning and maintenance

9.2.1. First steps

Before any cleaning or maintenance procedure, complete the following steps:

No.	Operation
	Caution These operations need to be performed before any cleaning or maintenance procedure.
A	Unplug the wall-mounted transformer.
B	Shut off water supply or put bypass valve(s) into bypass position.
C	Relieve system pressure before performing any operations.

9.2.2. Piston and/or brine valve replacement

No.	Operation
A	Disconnect the meter cable (**1**), if available.
B	Using a flat screwdriver, unscrew (**5**) and remove the cover (**4**).
C	Using a flat screwdriver, unscrew (**3**) and remove the washer (**2**).
D	Using a flat screwdriver or a 8 mm wrench, unscrew (**7**) and remove the power head (**6**) from the valve body (**8**).
E	Using a flat screwdriver or a 8 mm wrench, unscrew (**9**) and remove the top plate (**10**).
F	Remove the brine valve (**12**) and/or the piston (**11**).
G	Change the piston (**11**) and/or the brine valve (**12**).
H	Reverse above procedure steps to rebuild.

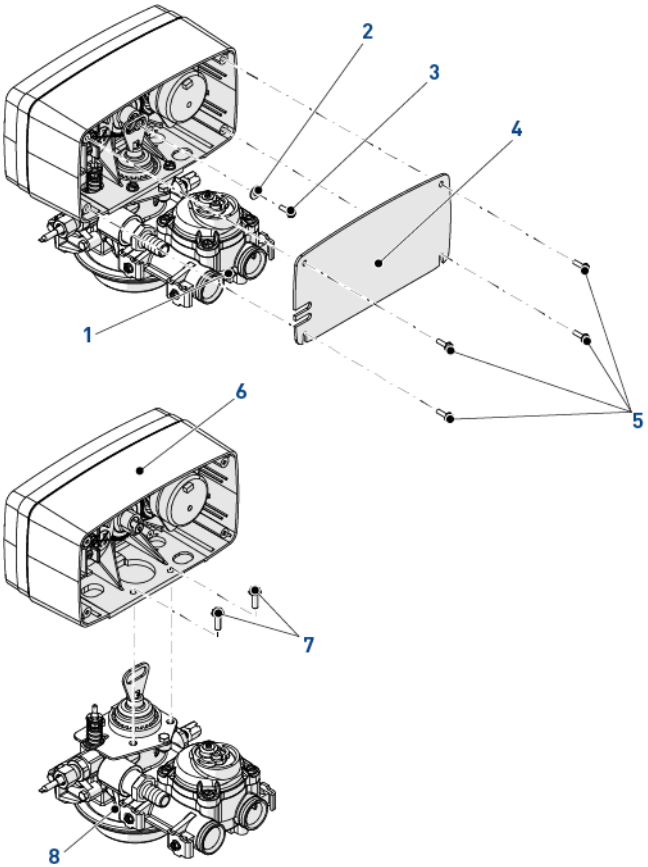

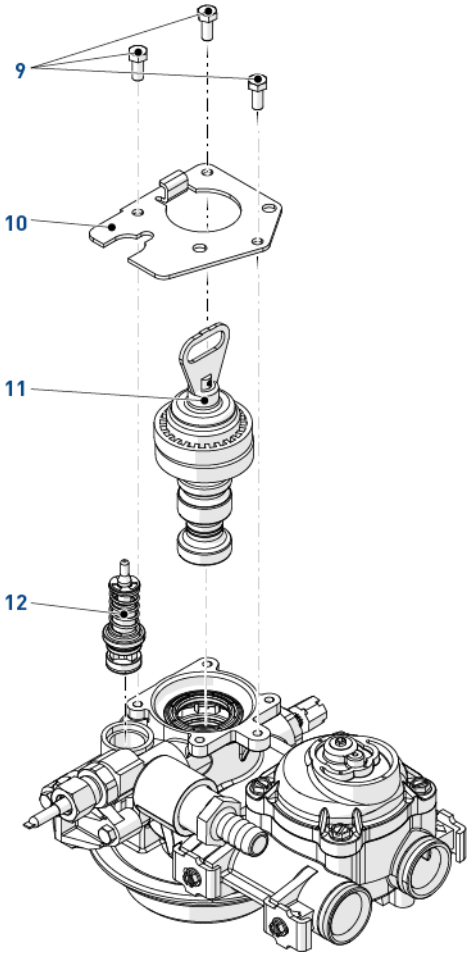
9
10
11
12

9.2.3. Seals and spacers cartridge replacement

Caution
Use only approved silicone grease or soapy water.

No.	Operation
A	Remove the piston, see"Piston and/or brine valve replacement", page 58.
B	Using a small hook, remove a seal (**3**).
C	Using the puller (**1**), remove a spacer (**4**).
D	Repeat **B** and **C** for all the seals and spacers.
E	Lubricate all seals (**3**) with approved lubricant only.
F	Put back a new seal (**3**) using the stuffer (**2**).
G	Put back a spacer (**4**) using the stuffer (**2**).
H	Repeat **F** and **G** for all the seals and spacers.
I	Rebuilt the piston, see"Piston and/or brine valve replacement", page 58.

9.2.3.1 Special tools needed

1

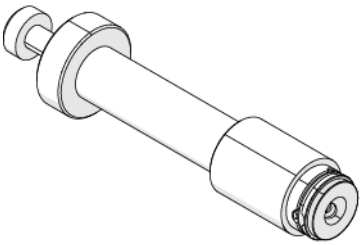

2

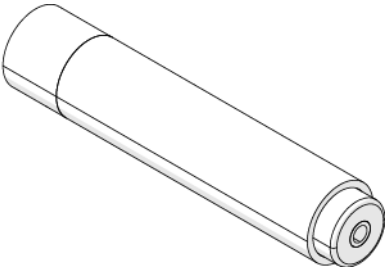

Item	Part number	Description	Packaging quantity
1	13061	Puller	1
2	12763	Stuffer	1

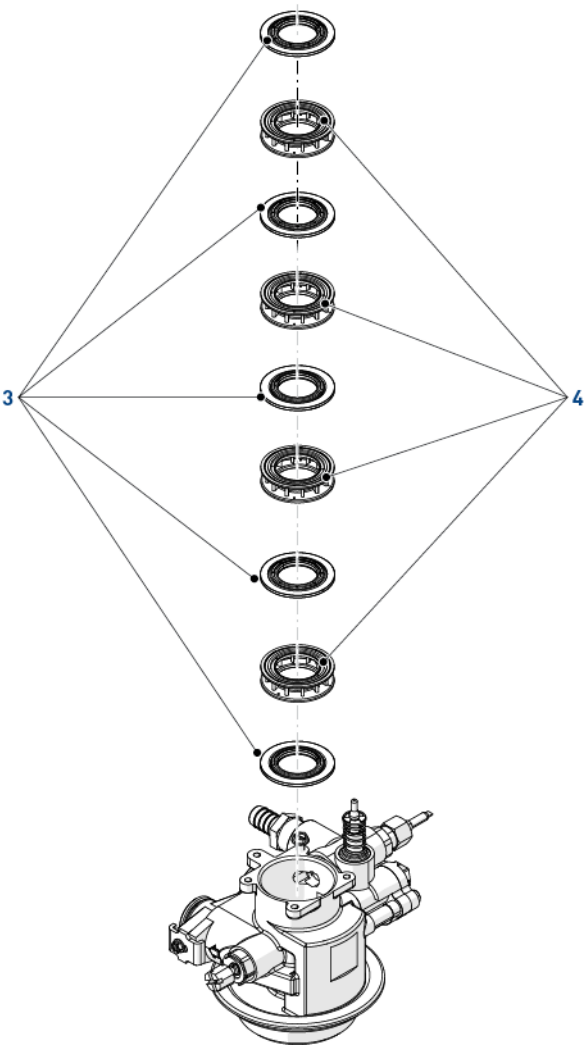
3
4

9.2.4. Controller motor replacement

No.	Operation
A	Using a flat screwdriver, unscrew (**4**) and remove the cover (**3**).
B	Disconnect the motor (**1**).
C	Using a Phillips screwdriver, unscrew (**2**) and remove the motor (**1**).
D	Change the motor (**1**).
E	Reverse above procedure steps to rebuild.

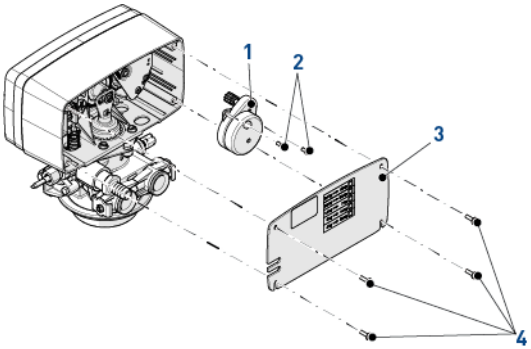

9.2.5. Brine cam assembly replacement

No.	Operation
A	Remove the power head, see"Piston and/or brine valve replacement", page 58.
B	Using a flat screwdriver, unscrew (**1**).
C	Remove the washer (**2**) and the brine cam (**3**).
D	Change the brine cam (**3**).
E	Reverse above procedure steps to rebuild.

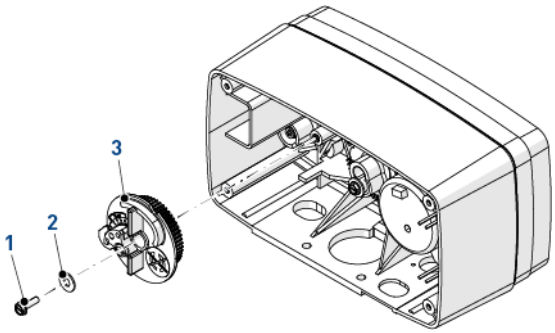

9.2.6. Micro-switch replacement

No.	Operation
A	Using a flat screwdriver, unscrew (**2**) and remove the cover (**1**).
B	Using a Phillips screwdriver, unscrew (**5**) and extract the protection plate (**4**) and the micro-switch (**3**).
C	Reverse above procedure steps to rebuild.

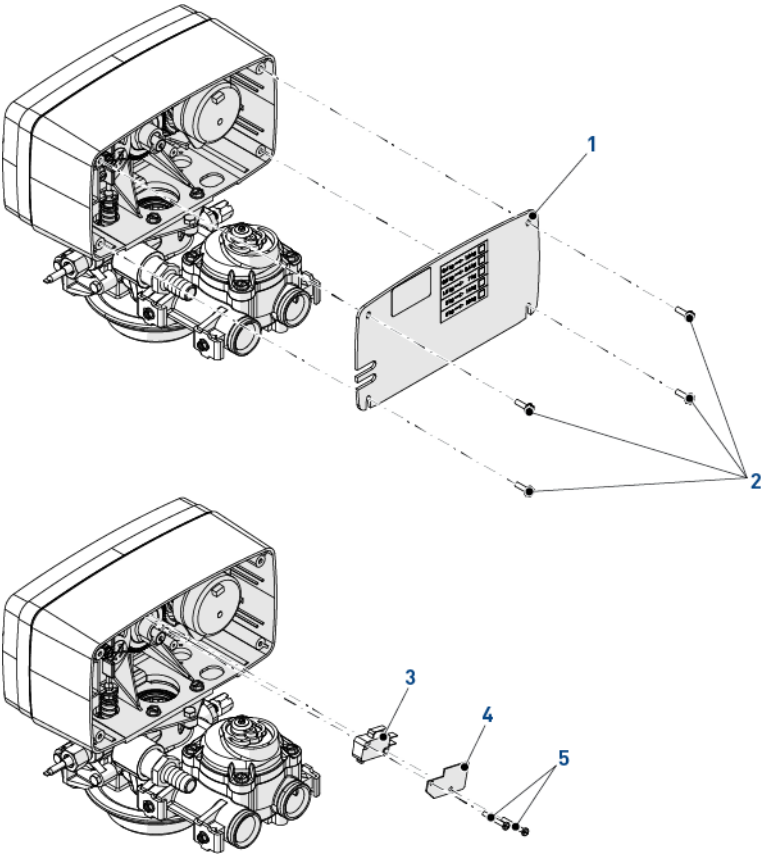

9.2.7. Injector cleaning

No.	Operation
A	Using a flat screwdriver or a 8 mm wrench, remove the screws (**6**).
B	Remove the cap injector (**5**).
C	Remove the seal (**4**).
D	Remove the filter (**2**).
E	Using a flat screwdriver, remove the injector nozzle (**3**).
F	Using a flat screwdriver, remove the injector throat (**1**).
G	Clean or change the injector throat (**1**), the injector nozzle (**3**), the filter (**2**) and the seal (**4**).
H	Lubricate all seals with approved lubricant only.
I	Reverse above procedure steps to rebuild.

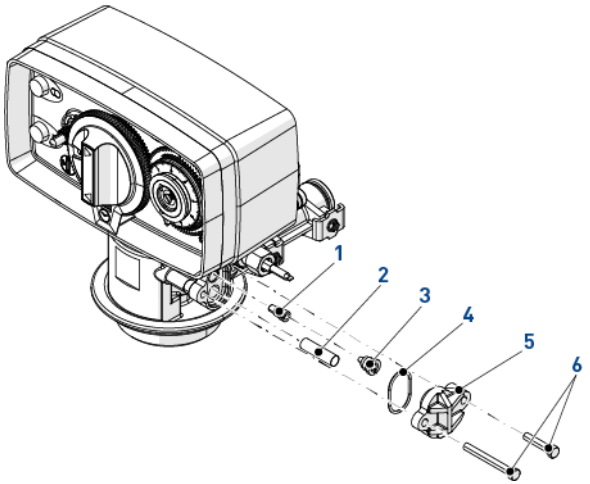

9.2.8. BLFC cleaning

No.	Operation
A	Using a wrench, remove the BLFC holder (**1**).
B	Using pliers, remove the cage (**4**) form the BLCF holder (**1**).
C	Remove the BLFC washer (**3**) from the BLFC holder (**1**).
D	Clean the BLFC washer (**3**) with a terry cloth.
E	Clean the cage (**4**).
F	Lubricate the o-ring (**2**) with approved lubricant only.
G	Reverse above procedure steps to rebuild.

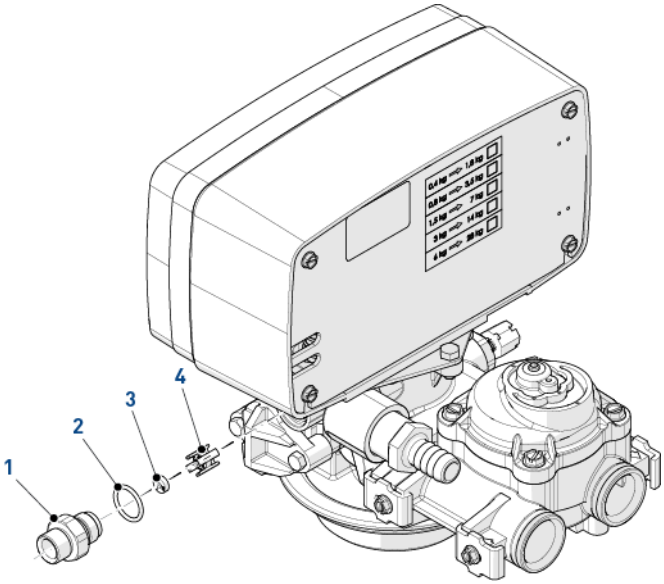

9.2.9. Valve on tank assembly

No.	Operation
A	Lubricate the seals with approved silicone grease.
B	Spin the valve (**1**) onto the tank (**2**), ensuring the threads are not cross-threaded.
C	Rotate the valve (**1**) clockwise and freely, without using force until it comes to a stop.
	Note This stop position is considered point zero.
D	Rotate the valve (**1**) clockwise from point zero to between ¼ turn and ½ turn.
	Caution Do NOT exceed 27 Nm of torque when installing the valve. Exceeding this limit may damage the threads and cause failure.

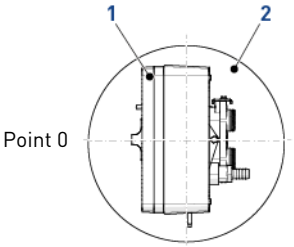

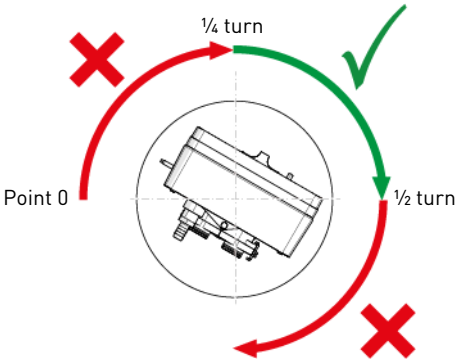

10. Troubleshooting

Problem	Cause	Solution
Softener fails to regenerate automatically	Interrupted power or switched off power source.	Restore the controller and connect to constant power source.
	Disconnected/faulty meter cable.	Check connections in the power head and on the meter cover. Change the cable.
	Defective power cord.	Replace cord.
	Defective motor.	Change motor.
	Defective controller.	Change controller.
	Blocked meter.	Clean or change meter.
	Bad programming.	Program correctly.
Softener delivers hard water	By-pass valve is open.	Close by-pass valve.
	No salt in the brine tank.	Add salt in the brine tank and keep salt level above water level.
	Plugged injector and/or filter.	Clean or replace injector and/or filter.
	Insufficient water flowing into brine tank.	Check brine tank filling time and clean flow regulator.
	Hot water tank hardness.	Repeated flushing of the hot water tank.
	Leak at the distributor hose.	Ensure the distributor tube has no cracks. Check the o-ring.
	Internal valve leak.	Change seals & spacers and/or piston assembly.
	Blocked meter.	Clean or change meter.
	Disconnected/faulty meter cable.	Check connections in the power head and on the meter cover. Change the cable.
	Bad programming.	Program correctly.
Excessive salt consumption	Improper brine refill setting.	Check use of salt and setting of brine refill.
	Too much water in the brine tank.	See problem below: Too much water in the brine tank.
	Bad programming.	Program correctly.

Problem	Cause	Solution
Water pressure drop	Iron deposit in the valve inlet.	Clean the inlet.
	Iron deposit in the valve.	Clean the valve and resin.
	Valve inlet obstructed by foreign elements.	Remove piston and clean the valve.
Resin loss through drain line	Top distributor missing or broken.	Add or replace the top distributor.
	Air in water system.	Ensure the presence of air check system in the brine tank.
	Improperly sized drain line flow control.	Size the drain line flow control correctly.
Iron presence in the valve/treated water	The resin bed is dirty.	Check backwash, brine draw, and brine refill. Regenerate more often and increase backwash cycle time.
	Iron concentration exceeds recommended parameters.	Contact your local dealer.
Too much water in the brine tank.	Plugged drain line flow control.	Clean drain line flow control.
	Plugged injector system.	Clean injector and screen, change if necessary.
	Faulty brine valve.	Change brine valve.
	Bad programming.	Program correctly.
	Controller is not cycling.	Change controller.
	Foreign material in the brine valve.	Replace brine valve seat and clean the valve.
	Foreign material in the brine line flow control.	Clean brine line flow control.
Salted water in service line	Plugged injector and/or filter.	Clean or replace injector and/or filter.
	Power head not operating properly.	Change power head.
	Foreign material in the brine valve.	Replace brine valve seat and clean the valve.
	Foreign material in the brine line flow control.	Clean brine line flow control.
	Low water pressure.	Raise inlet pressure to 1.8 bar minimum.
	Bad programming.	Program correctly.

Problem	Cause	Solution
Softener fails to draw brine	Plugged drain line flow control.	Clean drain line flow control.
	Plugged injector and/or filter.	Clean or replace injector and/or filter.
	Low water pressure.	Raise inlet pressure to 1.8 bar minimum.
	Internal valve leak.	Change seals & spacers and/or piston assembly.
	Bad programming.	Program correctly.
	Power head not operating properly.	Change power head.
Controller cycles continuously	Power head not operating properly.	Change power head.
	Faulty microswitch or wiring loom.	Change microswitch or wiring loom.
	Defective or badly set cycle cam.	Reposition or change cycle cam.
Drain flows continuously	Foreign elements in the valve.	Clean valve and check it in the different regeneration positions.
	Internal valve leak.	Change seals & spacers and/or piston assembly.
	Valve blocked in brine refill or backwash.	
	Defective or blocked motor.	Change motor and check gear teeth.
	Power head not operating properly.	Change power head.

11. Spare parts

11.1. Power head parts list

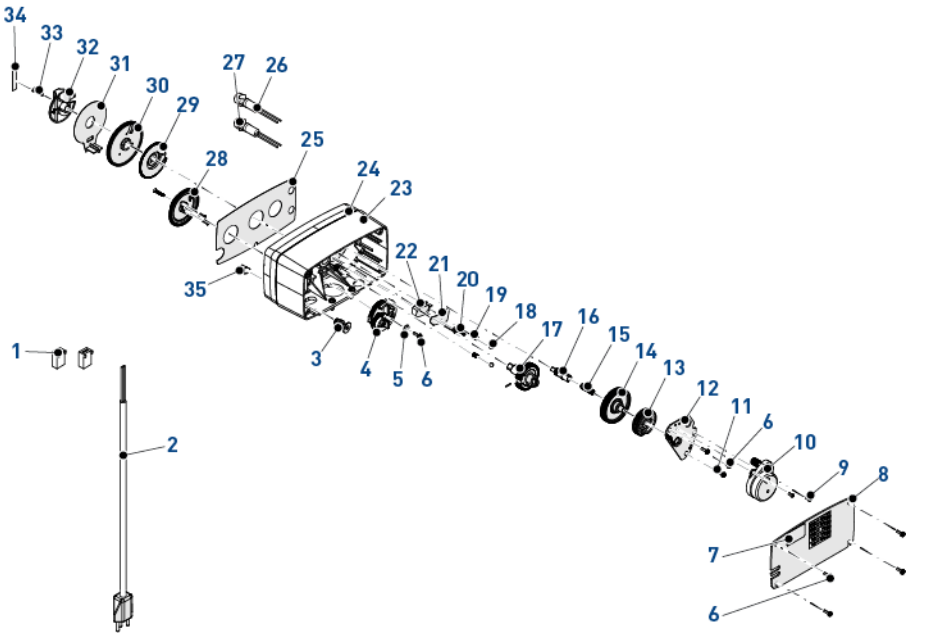

Item	Part number	Description	Assembly quantity	Min. order quantity
1	40422SP	Wire nut	2	50
2	11545	Power cord European black	1	1
3	13547SP	Strain relief	1	50
4	24121-0.12	Brine cam assy 4600/5600 DF	1	1
-	24121-0.25	Brine cam assy 4600/5600 DF	1	1
-	24121-0.50	Brine cam assy 4600/5600 DF	1	1
-	24121-1	Brine cam assy 4600/5600 DF	1	1
-	25736-0.12	Brine cam assy 4600/5600 DF FR	1	1
-	25736-0.25	Brine cam assy 4600/5600 DF FR	1	1
-	25736-0.50	Brine cam assy 4600/5600 DF FR	1	1
-	25736-1	Brine cam assy 4600/5600 DF FR	1	1

Item	Part number	Description	Assembly quantity	Min. order quantity
4	26070-0.12	Brine cam assy 4600/5600 DF imm	1	1
-	26070-0.25	Brine cam assy 4600/5600 DF imm	1	1
-	26070-0.50	Brine cam assy 4600/5600 DF imm	1	1
-	26070-1	Brine cam assy 4600/5600 DF imm	1	1
-	26116-0.12	Brine cam assy 4600/5600 DF FR imm	1	1
-	26116-0.25	Brine cam assy 4600/5600 DF FR imm	1	1
-	26116-0.50	Brine cam assy 4600/5600 DF FR imm	1	1
-	26116-1	Brine cam assy 4600/5600 DF FR imm	1	1
5	12037SP	Plain washer	1	50
6	13296SP	Screw	8	50
7	21271	Serial number label	1	1
8	24099	Back cover assy 5600/4600	1	1
9	11384SP	Screw	2	50
10	18824-1	Motor 230V 50Hz 1/30 rpm	1	1
-	18825	Motor 230V 50Hz 1/15 rpm	1	1
11	26885	Screw	1	1
12	23341	Motor mounting plate	1	1
13	13164SP	Drive gear	1	10
14	13017SP	Idler gear	1	10
15	13312SP	Spring idler	1	50
16	13018SP	Idler pinion	1	50
17	13170SP	Main drive gear & shaft	1	10
18	13300SP	Ball ¼" dia	1	50
19	14457SP	Spring detent	1	50
20	18158SP	Screw	1	50
21	14087SP	Insulator	1	50
22	10218SP	Microswitch	1	5
23	13162-02	Black drive housing	1	1
24	BU26970	Tape strip label 4600/5600 eco green	1	10
25	27164	Front label 5600 eco picto without light	1	10
-	28189SP	Front label 5600 eco picto with lights	1	10

Item	Part number	Description	Assembly quantity	Min. order quantity
26	24378SP	Green light 4600/5600 230V	1	10
-	26722SP	Green light 4600/5600 24V	1	10
27	24377SP	Red light 4600/5600 230V	1	10
-	26723SP	Red light 4600/5600 24V	1	10
28	24119	Program wheel assy 8 m^3	1	1
-	24120	Program wheel assy 40 m^3	1	1
29	13802SP	Cycle actuator gear	1	10
-	15223SP	Cycle actuator gear	1	10
30	13009-21SP	24 hour gear	1	10
31	26963SP	Valve pos dial picto 5600 Std/LWU	1	10
31	26965SP	Valve pos dial picto 5600 FR	1	10
32	14177SP	Knob BK 4600/5600	1	10
33	15151SP	Screw	1	50
34	24750SP	Control knob label	1	10
35	14252SP	Bearing cap	1	10

11.2. Time clock power head specific parts and assembly list

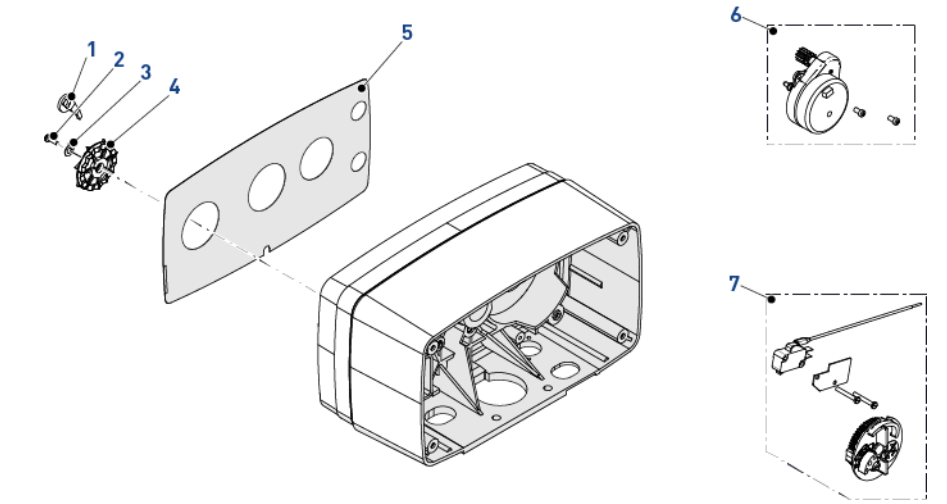

Item	Part number	Description	Assembly quantity	Min. order quantity
1	13011	ARM cycle actuator	1	1
2	13296SP	Screw	1	50
3	13014	Pointer regen	1	1
4	24100	Skipper wheel assy 12 days	1	1
-	14860	Skipper wheel assy 7 days	1	1
5	BU26968	Front label TC picto with lights	1	10
-	27165	Front label 5600 TC picto without light	1	10
6	26775	Timer motor assy 230V/50Hz 1/30 rpm	1	1
-	26776	Timer motor assy 230V/50Hz 1/15 rpm	1	1
-	26778	Timer motor assy 24V/50Hz 1/30 rpm	1	1
-	26779	Timer motor assy 24V/50Hz 1/15 rpm	1	1
7	BU28671-0.12	Kit microswitch 5600 lights 1 to 3,5 kg	1	1
-	BU28671-0.25	Kit microswitch 5600 lights 1,5 to 7 kg	1	1
-	BU28671-0.50	Kit microswitch 5600 lights 3 to 14 kg	1	1
-	BU28671-1	Kit microswitch 5600 lights 6 to 28 kg	1	1
Not shown	28230	Brine cam salt label 0.5 - 1.8 kg, white	1	10
Not shown	28231	Brine cam salt label 1 - 3.5 kg, green	1	10
Not shown	28232	Brine cam salt label 1.5 - 7 kg, blue	1	10
Not shown	BU28233	Brine cam salt label 3 - 14 kg, black	1	10
Not shown	BU28234	Brine cam salt label 6 - 28 kg, red	1	10
Not shown	13300SP	Ball ¼" dia	1	50
Not shown	13311SP	Spring detent	1	50
Not shown	13864SP	Skipper wheel ring	1	10

11.3. Valve parts list

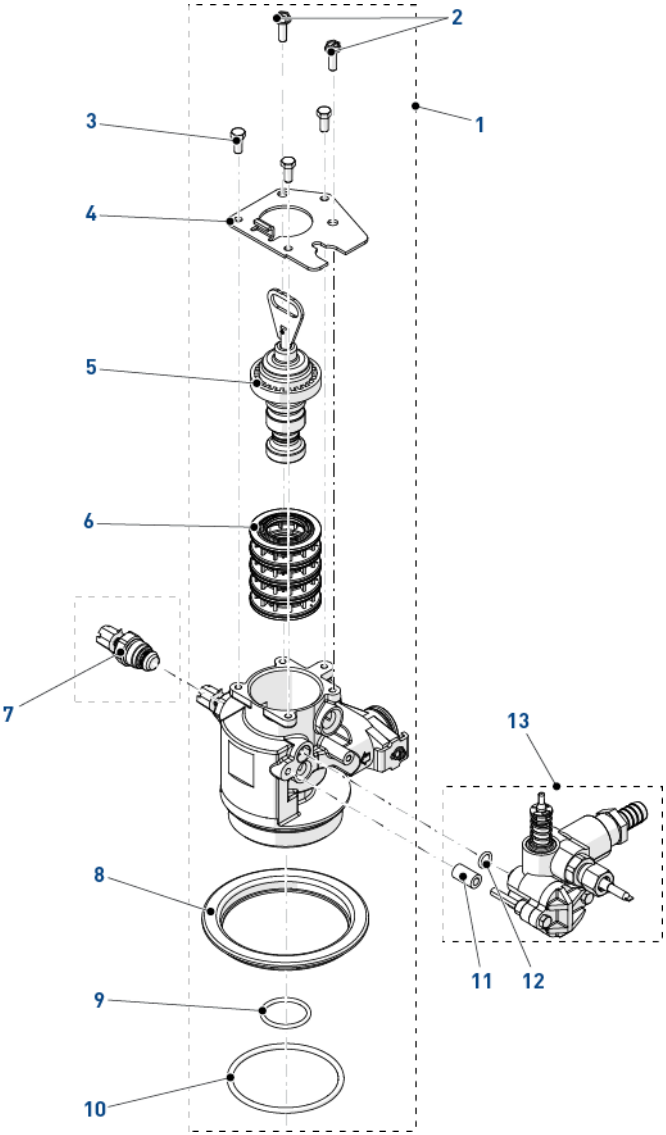

Item	Part number	Description	Assembly quantity	Min. order quantity
1	BU28518-01	VB assy 4600 filter	1	1
-	BU28518-02	VB assy 4600 with mixing	1	1
-	BU28518-03	VB assy 4600 LWU with mixing	1	1
-	BU28518-04	VB assy 4600 FR with mixing	1	1
-	BU28518-05	VB assy 4600 HW with mixing	1	1
-	BU28518-06	VB assy 4600 LWU HW with mixing	1	1
-	BU28518-07	VB assy 4600 FR HW with mixing	1	1
2	12473SP	Screw hex washer 10-24 x 5/8 18-8SS	2	50
3	11737SP	Screw TH M5x12	3	50
4	BU13546	Top plate	1	1
5	18928-US	Piston assy 4600/5600 filter	1	1
-	24116-US	Piston assy 4600/5600	1	1
-	24117-US	Piston assy 4600/5600 LWU	1	1
-	18089-US	Piston assy 4600/5600 LWU FR	1	1
-	27077-01-US	Piston assy 4600 HW	1	1
6	24115	S&S kit residential	1	1
-	24944	S&S kit 4600/9000 upper HW	1	10
7	24509-01	Mixing assy residential	1	10
8	11965SP	Cabinet retainer ABS 4600	1	10
9	13304-01SP	O-ring	1	10
10	10381-01SP	O-ring	1	10
11	13361SP	Spacer inj	1	5
12	13497SP	Air dispenser	1	50
13	VCINJ1	Injector residential	1	1

11.4. Meters parts list

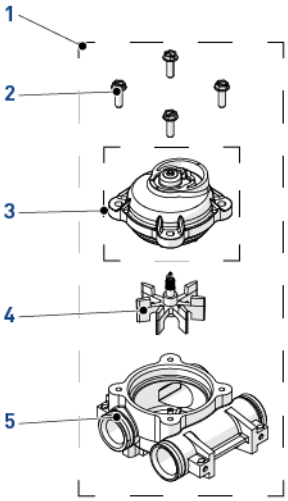

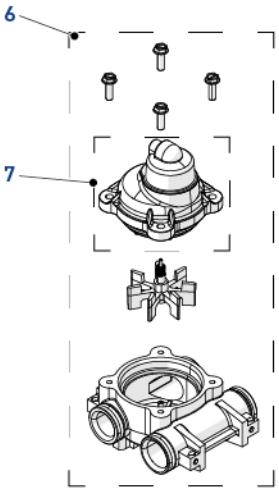

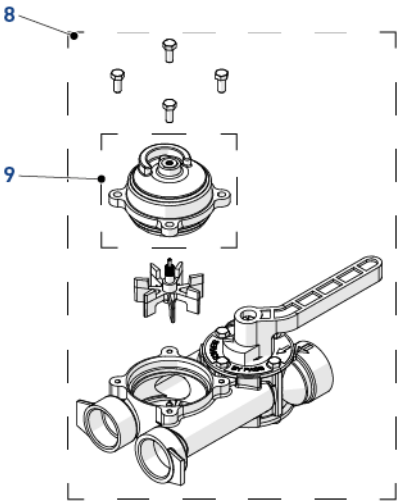

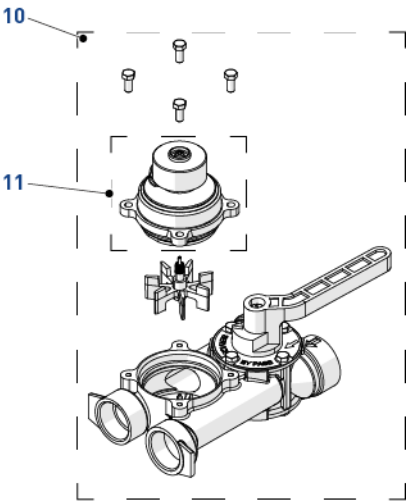

Item	Part number	Description	Assembly quantity	Min. order quantity
1	24107	Meter assy ¾" 8 m³ plastic	1	1
2	12473SP	Screw hex washer 10-24x. 18-8SS	4	50
3	BR14038	Cover meter assy plastic	1	1
4	13509SP	Impeller meter except 2" & 3"	1	10
5	24102	Meter body assy ¾" & ring	1	1
6	25871	Meter assy ¾" extended plastic 90°	1	1
7	BR15659	Meter cover assy plastic extended 90°	1	1
8	26156-10	Eco bypass assy 40 m³ & red handle HW	1	1
9	15218	Cover meter assy brass	1	1
10	26006-10	Eco bypass assy 8 m³ & red handle HW	1	1
11	15237	Meter cover assy brass extended	1	1

11.5. Safety brine valve parts list

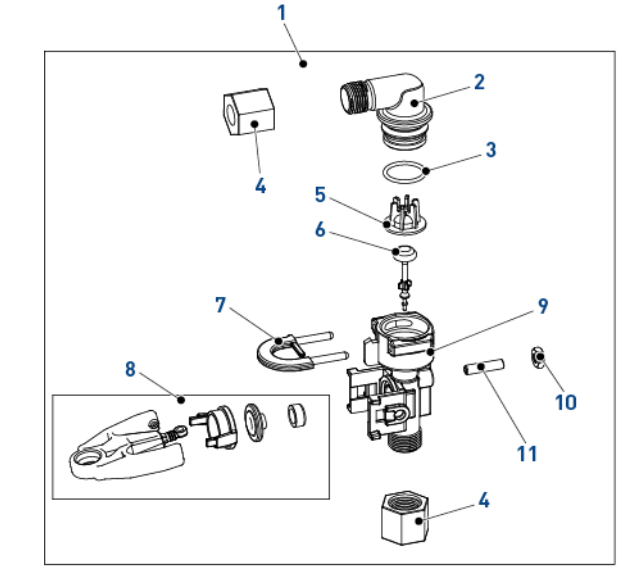

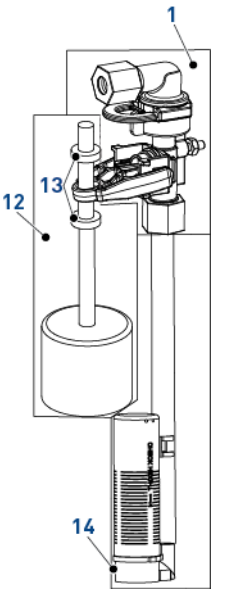

Item	Part number	Description	Assembly quantity	Min. order quantity
1	60014SP	Safety brine assy, 2310	1	1
2	PWG19647	Elbow assy, SBV	1	1
3	11183-01SP	O-ring	1	50
4	19625SP	BV 1650 plastic nut assy	1	10
5	PWG19649	Flow disperser	1	1
6	PWG19652-01	Poppet assy, SBV, with o-ring	1	1
7	18312SP	Retainer, drain	1	10
8	PWG19803	SBV arm assy	1	1
9	PWG19645	Body, SBV, 2310	1	1
10	19805SP	Plastic SBV 2310 Nut	1	50

Item	Part number	Description	Assembly quantity	Min. order quantity
11	19804	Screw, sckt hd, set, 10-24 x 0.75"	1	1
12	60068-30SP	New float assy 2310	1	10
13	10150SP	Grommet pass rod 2300/2310/2350	1	50
14	18168	Air check 500 (0,915 m)	1	1
-	26773	Air check 500 (1,25 m)	1	1
-	23473	Air check 500 (0,915 m) HW	1	1

11.6. Safety brine valves list

2300 **2310** **BV 44**

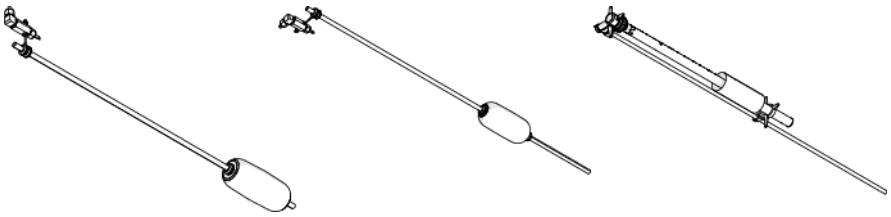

Item	Brine System	Part number	Description	Assembly quantity	Min. order quantity
-	1600/ 1650	27833	SBV 2300 - without air-check	1	1
-		27834	SBV 2300 - HW - without air-check	1	1
-		60067-03	SBV 2310 - without air-check	1	1
-		25687	BV 44 - 914mm	1	1
-		18961	BV 44 - 1250mm	1	1

11.7. Bypass and coupling parts lists

11.7.1. Bypass stainless Steel 1" BSP

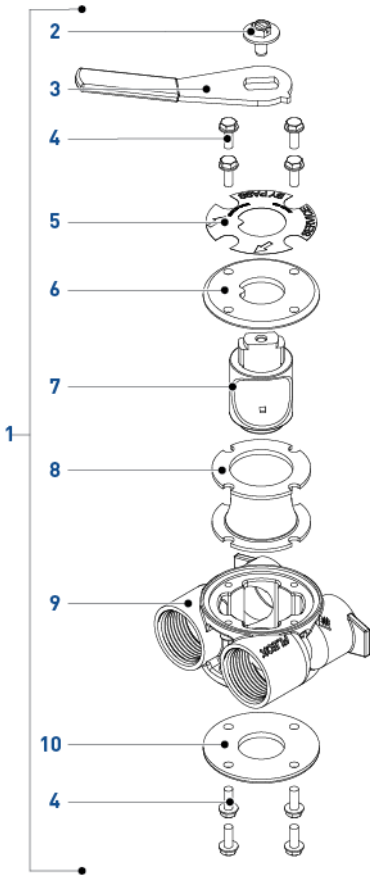

Item	Part number	Description	Assembly quantity	Min. order quantity
1	BU28502	Bypass stainless steel 1" BSP	1	1
2	13386SP	Screw hex hd mach 1/4-20 X 1 or slot hex	1	10
3	24419-10SP	Bypass handle red	1	10
4	15727	Screw, hex washer head 10-24 x 0.5"	8	8
5	13604-1	Label bypass standard	1	1
6	BU11978	Cover bypass, top	1	1
7	BU11972	Plug, bypass	1	1
8	14105SP	Seal, bypass, 560CD	1	5
9	40634-10	Bypass body, 1" BSP, stainless steel	1	1
10	BU11986	Cover bypass, bottom	1	1

11.7.2. Bypass stainless Steel 1" BSP with mixing

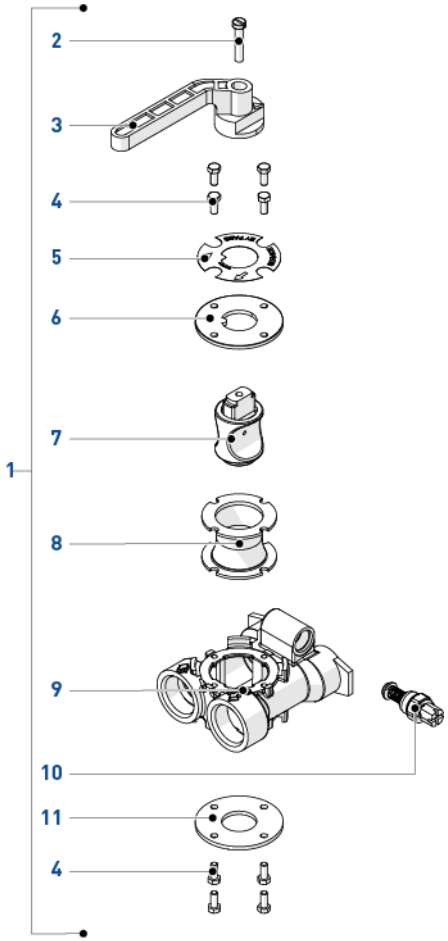

Item	Part number	Description	Assembly quantity	Min. order quantity
1	24734-10	Bypass 1" BSP female brass with mixing	1	1
2	BU28642	Screw TC, slotted, M6x30	1	10
3	24419-10SP	Bypass handle red	1	10
4	11737SP	Screw TH M5x12	8	50
5	21134	Bypass label	1	1
6	BU11978	Cover bypass, top	1	1
7	BU11972	Plug, bypass	1	1
8	14105SP	Seal, bypass, 560CD	1	5
9	24155	Bypass body, 1" BSP, brass	1	1
10	24509-02	Mixing assy HW	1	1
11	BU11986	Cover bypass, bottom	1	1

11.7.3. Plastic residential bypass and coupling parts list

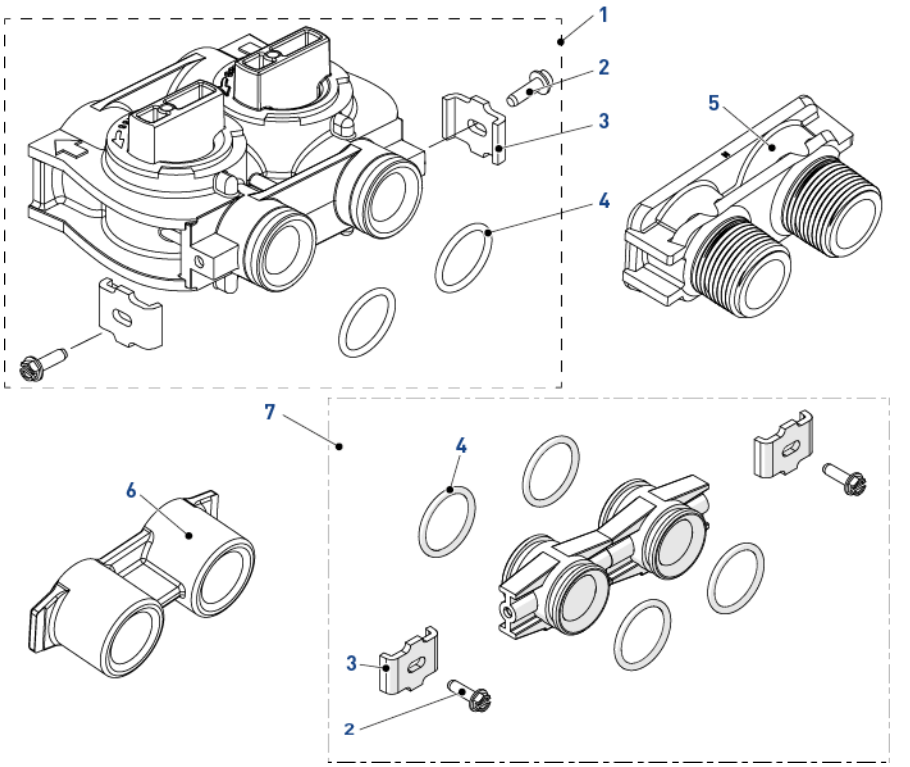

Item	Part number	Description	Assembly quantity	Min. order quantity
1	BU26054	Plastic residential bypass	1	1
2	13314SP	Screw adapt clip	2	50
3	13255SP	Mounting clip	2	12
4	13305-01SP	O-ring	2 - 4	10
5	18706-10	Yoke, 1", BSP, male, plastic	1	1
-	18706-12	Yoke, ¾", BSP, male, plastic	1	1
-	24689	Yoke, ¾", BSP, male, brass	1	1
6	13398-10	Yoke 1", BSP, Female, brass	1	1
7	Kit 256	Adapter assembly, kit coupling, with o-rings	1	1

11.8. CE compliance components list

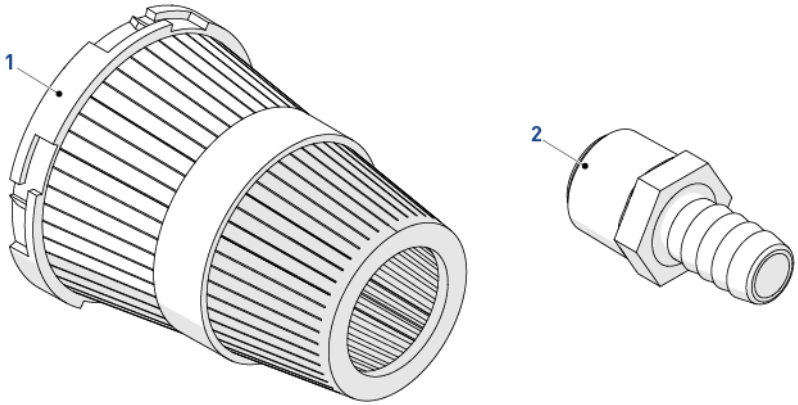

Item	Part number	Description	Assembly quantity	Min. order quantity
1	18280SP	Collector top 1"x 0.011 grey bayonet	1	10
2	13308SP	Drain hose barb ½"	1	10

12. Disposal

The device must be scrapped in accordance with directive 2012/19/EU or the environmental standards in force in the country of installation. The components included in the system must be separated and recycled in a waste recycling center that conforms with the legislation in force in the country of installation. This will help to reduce the impact on the environment, health, safety and help to promote recycling. Pentair does not collect used product for recycling. Contact your local recycling center for more information.



PAGE INTENTIONALLY LEFT BLANK

www.pentairaquaeurope.com